LEDTECH ELECTRONICS CORP.

NANYA ROAD,MUGANG ZHAOQING
CITY GUANGDONG CHINA.
TEL:86-758-2875541,2870651,2877464,2876185,2877017
FAX:86-758-2878014
Http://www.ledtech.com.tw

SPECIFICATION

PART NO. : LT8AW1-54-UEE3-TE-Z

0603 SMD CHIP LED



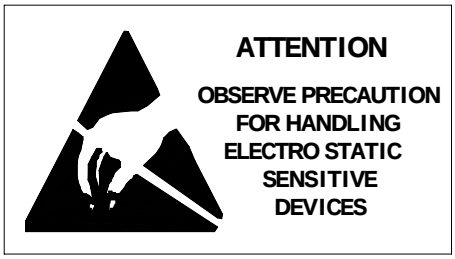

Approved by	Checked by	Prepared by
Tung	*Andy*	*Karen*

Package Dimensions

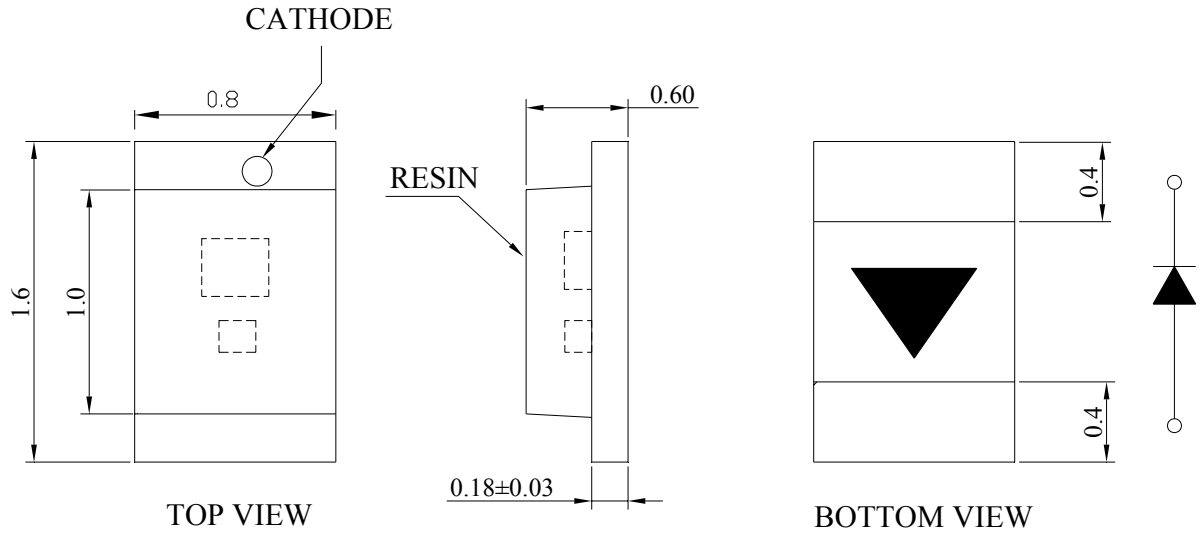

Notes:

1. All dimensions are in mm.
2. Tolerance is ±0.1mm unless otherwise noted.

Description

Part No.	LED Chip		Lens Color
	Material	Emitting Color	
LT8AW1-54-UEE3-TE-Z	InGaN/Sapphire	White	Yellow diffused

Absolute Maximum Ratings at Ta=25 ℃

Parameter	Symbol	Rating	Unit
Power Dissipation	PD	120	mW
Reverse Voltage	VR	5	V
D.C. Forward Current	If	30	mA
Peak Current(1/10Duty Cycle,0.1ms Pulse Width.)	If(Peak)	80	mA
Operating Temperature Range	Topr.	-30 to +80	℃
Storage Temperature Range	Tstg.	-40 to +85	℃
Soldering Temperature.	Tsol.	Reflow Soldering:260℃ for 10 sec.	
Electric Static Discharge	ESD	6000	V

Electrical and Optical Characteristics:

Parameter	Symbol	Condition	Min.	Typ.	Max.	Unit
Luminous Intensity	Iv	If=20mA	244	340		mcd
Forward Voltage	Vf	If=20mA		3.2	4.0	V
CIE Chromaticity Coordinates:X Axis	-	If=20mA		0.31		
CIE Chromaticity Coordinates:Y Axis	-	If=20mA		0.30		
Reverse Current	Ir	Vr=5V			50	μA
Viewing Angle	2θ 1/2	If=20mA		140		deg
Spectrum Line Halfwidth	Δλ	If=20mA		26		nm

Notes:1.The datas tested by IS tester.

2. Customer's special requirements are also welcome.

Chromaticity Coordinates Specifications for Bin Grading:

COLOR RANKS(IF=20mA.Ta=25℃)

BiN	RANK					BiN	RANK				
A1	X	0.27	0.28	0.291	0.281	B5	X	0.296	0.304	0.315	0.307
	Y	0.265	0.282	0.273	0.256		Y	0.307	0.319	0.311	0.298
A2	X	0.281	0.291	0.302	0.292	B6	X	0.307	0.315	0.326	0.318
	Y	0.256	0.273	0.265	0.248		Y	0.298	0.311	0.303	0.29
B1	X	0.28	0.288	0.299	0.291	B7	X	0.304	0.312	0.323	0.315
	Y	0.282	0.294	0.286	0.273		Y	0.319	0.331	0.323	0.311
B2	X	0.291	0.299	0.31	0.302	B8	X	0.315	0.323	0.334	0.326
	Y	0.273	0.286	0.277	0.265		Y	0.311	0.323	0.315	0.303
B3	X	0.288	0.296	0.307	0.299	C1	X	0.312	0.322	0.333	0.323
	Y	0.294	0.307	0.298	0.286		Y	0.331	0.348	0.34	0.323
B4	X	0.299	0.307	0.318	0.31	C2	X	0.323	0.333	0.344	0.334
	Y	0.286	0.298	0.29	0.277		Y	0.323	0.34	0.332	0.315

Notes:X.Y Tolereanceeach Bin limit is±0.01.

Chromaticity Coordinates & Bin grading diagram:

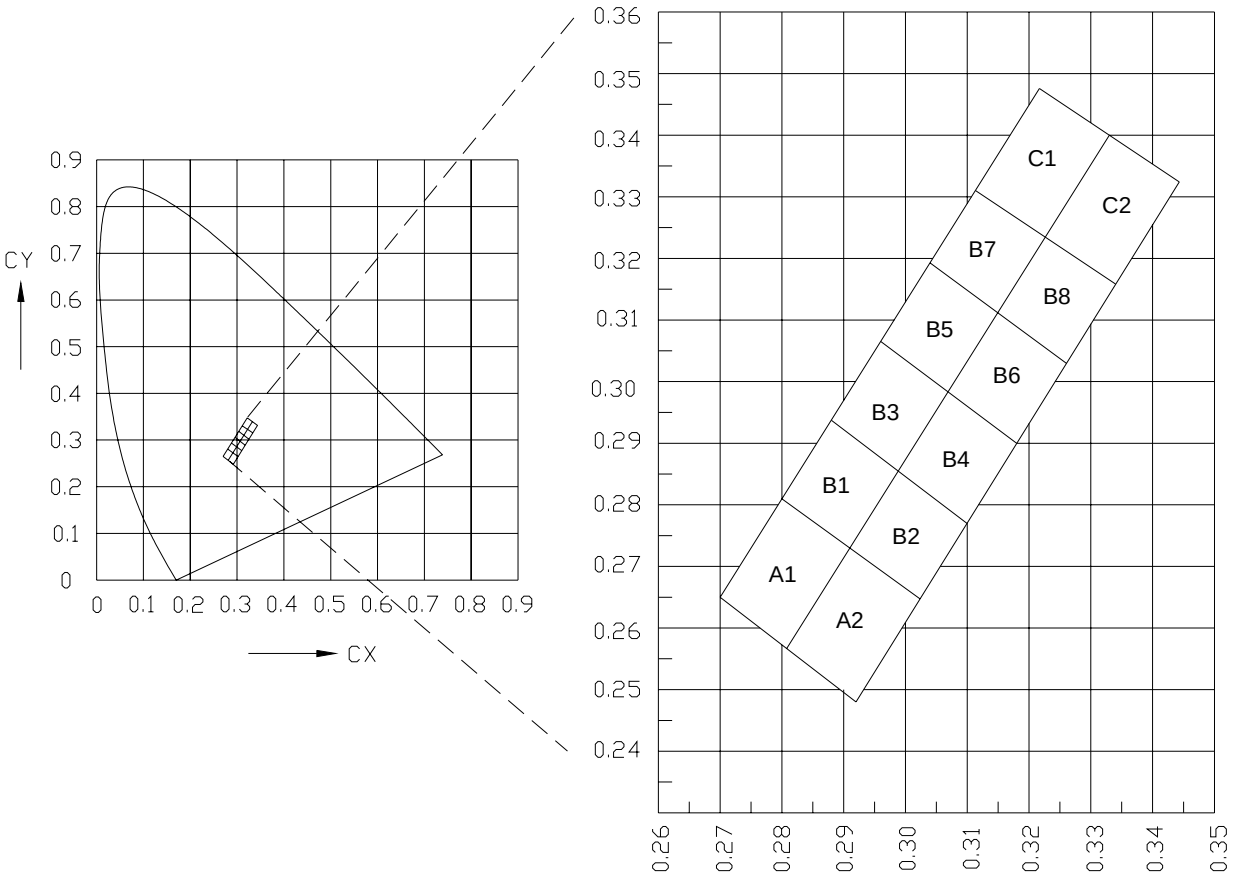

. Typical Electrical/Optical Characteristic Curves

(25℃ Ambient Temperature Unless Otherwise Noted)

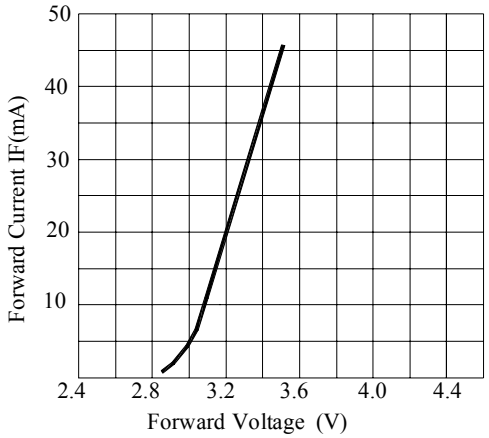

FORWARD CURRENT VS.APPLIED VOLTAGE

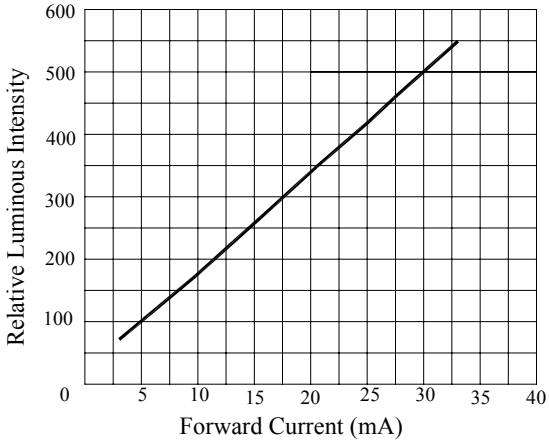

RELATIVE INTENSITY VS. FORWARD CURRENT

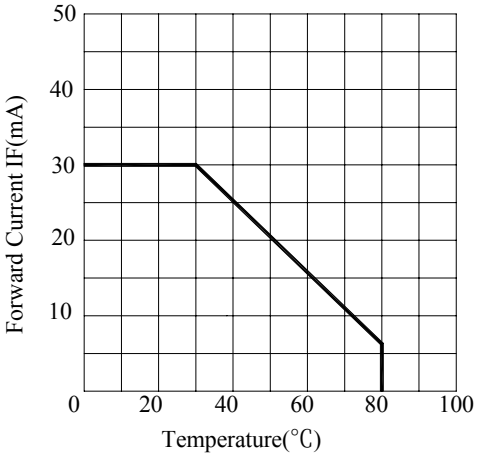

FORWARD CURRENT VS. AMBIENT TEMPERATURE

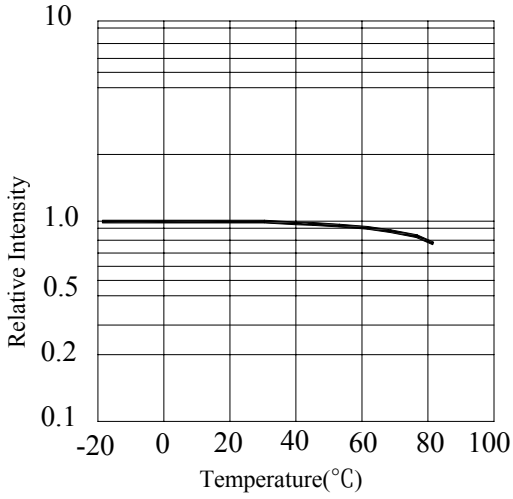

RELATIVE INTENSITY VS. AMBIENT TEMPERATURE

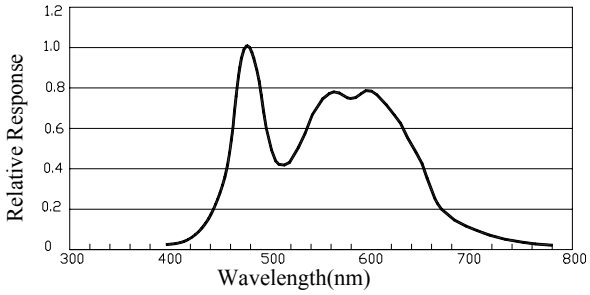

WHITE LED SPECTRUM VS. WAVELENGTH

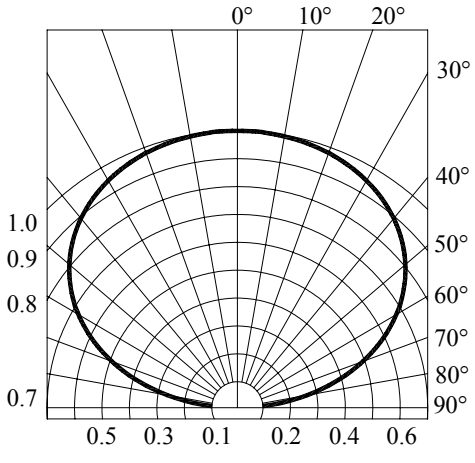

Radiation Diagram

Precautions in Use:

Storage

Recommend storage environment

Temperature： 5℃ 30℃ (41°F 86°F)

Humidity： 60% RH Max.

Use within 7 days after opening of sealed vapor/ESD barrier bags.

If the moisture absorbent material (silica gel) has faded away or the LEDs have exceeded the storage time, baking treatment should be performed using the following conditions. Baking treatment : 60±5℃ for 24 hours.

Fold the opened bag firmly and keep in dry environment.

Soldering

Reflow Soldering

Recommend use of upper and lower heater type reflow furnace.

260℃ Max for up to 10 seconds, one time only.

Pre-heat is 150℃ Max for up to 2 minutes Max.

In case of screen-printing, keep metal mask thickness between 0.2mm and 0.3mm.

Cleaning

Surface condition of this device may change when organic solvents such as trichloroethylene or acetone were applied.

Avoid using organic solvent.

Recommend ultrasonic method 300W Max.

Packaging

EIA-481A standard package.

In 8mm tape on 4000 pcs diameter reels sealed in vapor/ESD barrier bags.

Reflow Temp/Time:

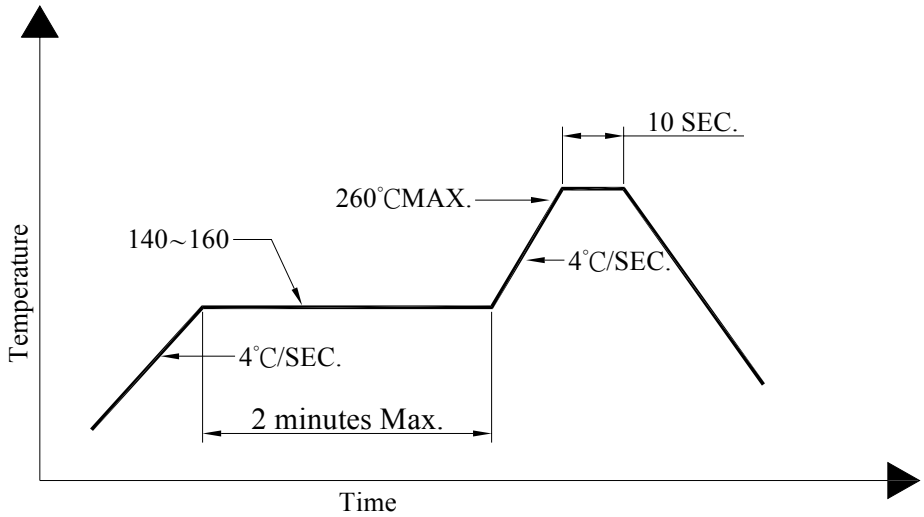

Reflow Soldering Pad Dimensions

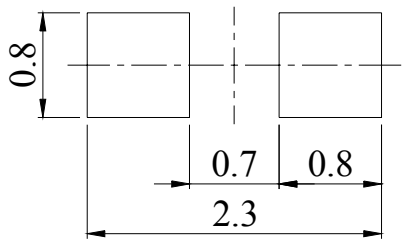

Dimensions for Tape

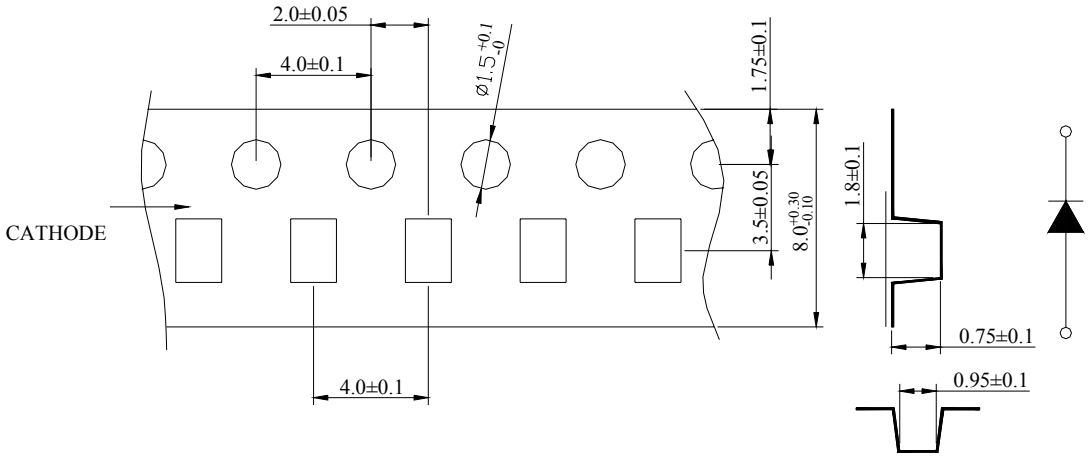

Dimensions for Reel

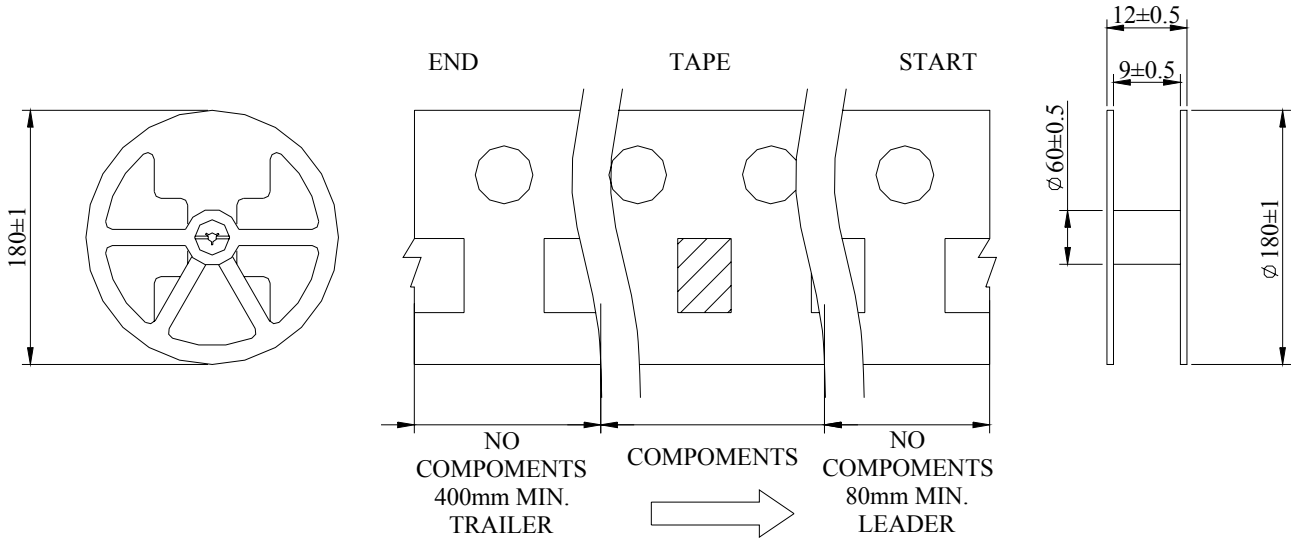

Notes:

1.All dimensions are in mm, tolerance is±2.0mm unless otherwise noted.

2.Specifications are subject to change without notice.

Dimensions for Tape

Reel : 4,000PCS

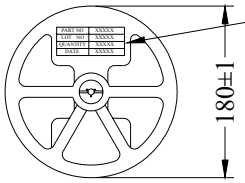

PART NO	XXXXX
LOT NO	XXXXX
QUANTITY	XXXXX
DATE	XXXXX
BIN CODE	XXXXX

Bag : 4,000PCS

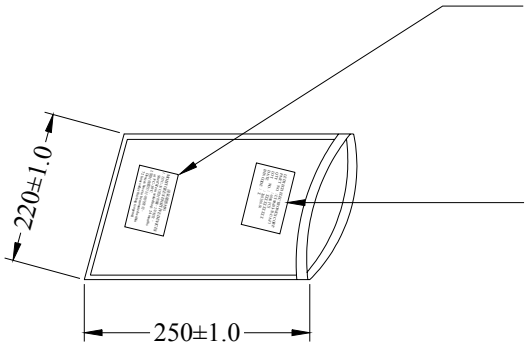

濕氣敏感材料
MOISTURE SENSITIVE DEVICES
1. 在5˚C~30˚C密封貯藏，2年有效。
Shelf life in sealed bag : 24 months at 5°C~30°C .
2. 開封後需在168小時內使用。
Devices have to be mounted within 168 hours after this bag is opened .

PART NO	XXXXX
LOT NO	XXXXX
QUANTITY	XXXXX
DATE	XXXXX
BIN CODE	XXXXX

5 Bags : 20,000PCS

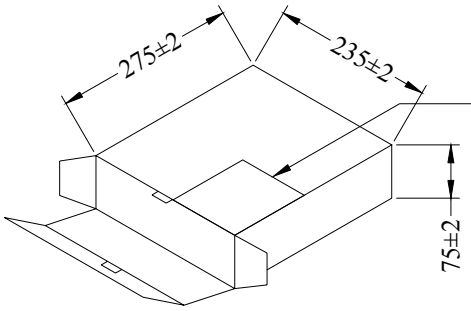

PART NO	XXXXX
LOT NO	XXXXX
BIN CODE	XXXXX
QUANTITY	XXXXX
DATE	XXXXX

5 Boxes :100,000PCS

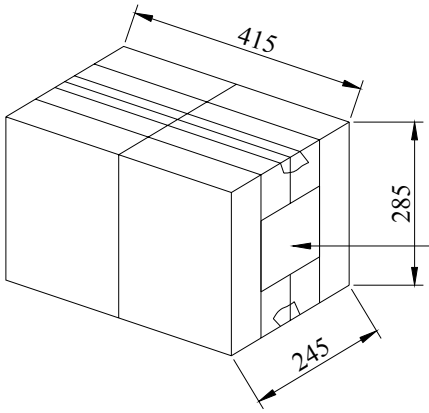

C/T NO	XXXXX
PART NO	XXXXX
QUANTITY	XXXXX
N. W.	XXXXX
G. W.	XXXXX
REMARK	XXXXX

Notes:

1.7 inch reel-4000 pieces per reel.

2.Minimum packing quantity is 500 pieces for remainders.

3.The maximum number of consecutive missing lamps is two.