White LED

SW604A-045

Date	Spec. Number	Ver.
2006/12/11	TS-045-00	PRELIMINARY

Device Selection Guide

Part Number EOS-	Luminous Intensity Iv(mcd) @ I_F = 150mA		Viewing Angle $2\theta_{1/2}$	Chromaticity @ IF = 150 mA		Forward Voltage V_F (v) @ I_F =150 mA		I_R(μA) @ V_R = 5V
	Min.	Typ.	Typ.	X(Typ.)	Y(Typ.)	Typ.	Max.	Max.
SW604A-045	2850	5000	120°	0.31	0.32	3.8	4.25	10

BIN #	4Y	5Y	4Z	5Z	Z1
Intensity (mcd) @ I_F=150mA	2850-3550	3550-4500	4500-5600	5600-7150	7150-9000

Package Dimensions

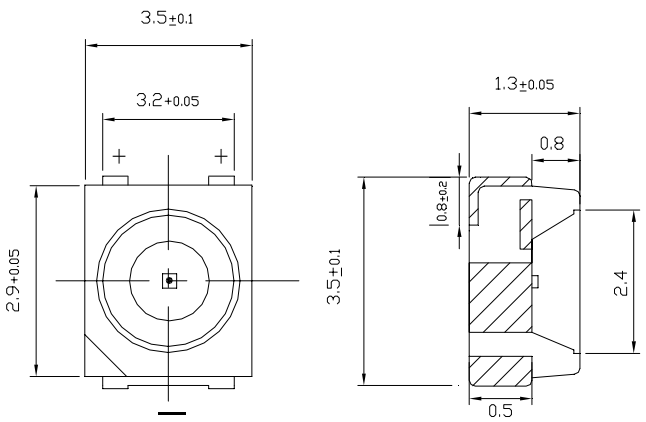

Beam Pattern

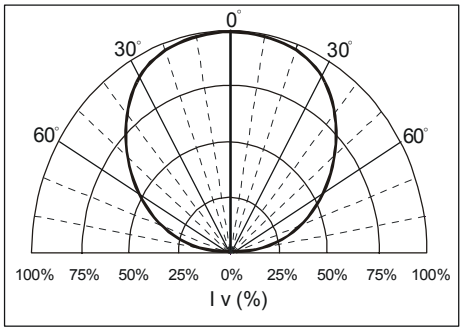

Note:

- All dimensions are in millimeter.
- Tolerance is ±0.20mm unless otherwise note.
- Specifications are subject to be changed without notice.

Absolute Maximum Ratings at T_A = 25℃

Parameter	Symbol	Maximum Value	*USER---APPROVED*
Average Forward Current	I_F	150mA	
Peak Forward Current[a]	I_{peak}	200mA	
Reverse Voltage	V_R	5V	
Power Dissipation	P_D	637.5mW	
Operating Temperature Range	T_{OPR}	-40℃ ~ + 85℃	
Storage Temperature Range	T_{STO}	-40℃ ~ + 100℃	
Lead Soldering Temperature	T_{SOL}	260℃ / 5 seconds	

Notes: [a] tp ≦ 10 μs, Duty Cycle = 0.005

Headquarters
5F, No. 1, Creation Road II, Hsinchu Science Park,
Hsinchu, Taiwan 300, R.O.C.
Tel : 886-3-5679000 Fax : 886-3-5679999
http://www.eoi.com.tw E-mail : Service@eoi.com.tw

U.S. Office
1400 W. Lambert Road, Suite B,
Brea, CA92821, U.S.A
Tel : 1-562-694-1246 Fax : 1-562-691-3087
http://www.eoi-us.com E-mail : Sales@eoius.com