TOSHIBA Bipolar Linear Integrated Circuit Silicon Monolithic

TA78L005AP, TA78L006AP, TA78L007AP, TA78L075AP, TA78L008AP, TA78L009AP, TA78L010AP, TA78L012AP, TA78L132AP, TA78L015AP, TA78L018AP, TA78L020AP, TA78L024AP

Three-Terminal Positive Regulators

5 V, 6 V, 7 V, 7.5 V, 8 V, 9 V, 10 V, 12 V, 13.2 V, 15 V, 18 V, 20 V, 24 V

Features

- Suitable for TTL, C^2MOS power supply.
- Internal short-circuit current limiting.
- Internal thermal overload protection.
- Maximum output current of 150 mA (T_j = 25°C).
- Available in a plastic TO-92MOD package.

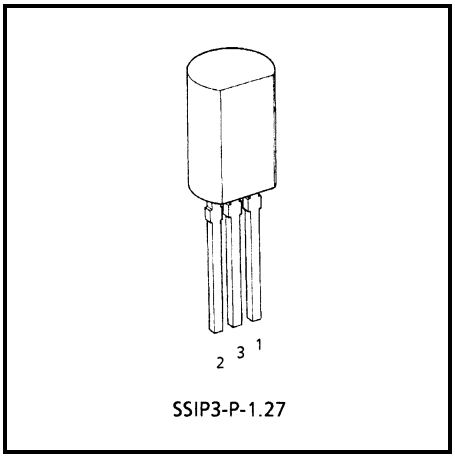

Weight: 0.36 g (Typ.)

Pin Assignment

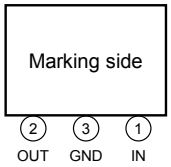

Marking

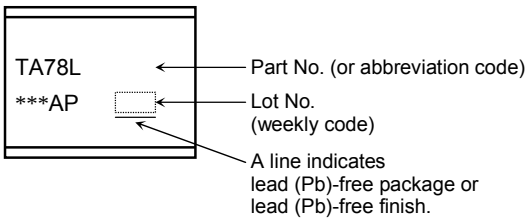

Equivalent Circuit

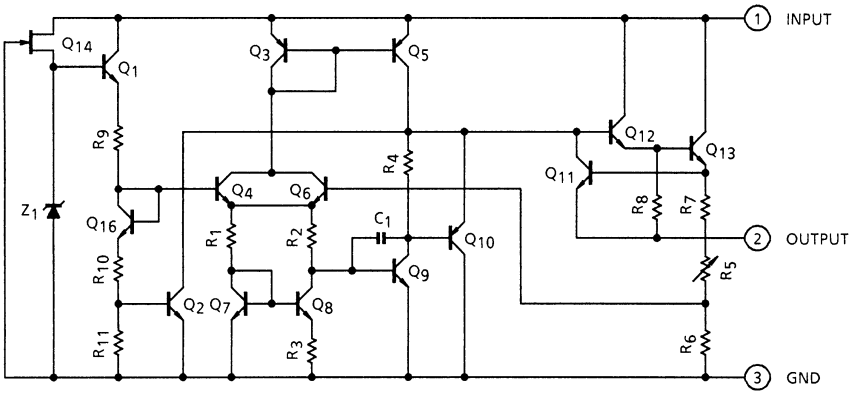

Absolute Maximum Ratings (Ta = 25°C)

Characteristics		Symbol	Rating	Unit
Input voltage	TA78L005AP	V_{IN}	35	V
	TA78L006AP			
	TA78L007AP			
	TA78L075AP			
	TA78L008AP			
	TA78L009AP			
	TA78L010AP			
	TA78L012AP			
	TA78L132AP			
	TA78L015AP			
	TA78L018AP		40	
	TA78L020AP			
	TA78L024AP			
Power dissipation	(Ta = 25°C)	P_D	800	mW
Operating temperature		T_{opr}	−30~85	°C
Storage temperature		T_{stg}	−55~150	°C
Junction temperature		T_j	150	°C
Thermal resistance		$R_{th\ (j\text{-}a)}$	156	°C/W

Note: Using continuously under heavy loads (e.g. the application of high temperature/current/voltage and the significant change in temperature, etc.) may cause this product to decrease in the reliability significantly even if the operating conditions (i.e. operating temperature/current/voltage, etc.) are within the absolute maximum ratings and the operating ranges.
Please design the appropriate reliability upon reviewing the Toshiba Semiconductor Reliability Handbook ("Handling Precautions"/Derating Concept and Methods) and individual reliability data (i.e. reliability test report and estimated failure rate, etc).

TA78L005AP
Electrical Characteristics
(Unless otherwise specified, V_{IN} = 10 V, I_{OUT} = 40 mA, C_{IN} = 0.33 μF, C_{OUT} = 0.1 μF, 0°C ≤ T_j ≤ 125°C)

Characteristics	Symbol	Test Circuit	Test Condition		Min	Typ.	Max	Unit
Output voltage	V_{OUT}	1	T_j = 25°C		4.8	5.0	5.2	V
Line regulation	Reg·line	1	T_j = 25°C	7.0 V ≤ V_{IN} ≤ 20 V	—	55	150	mV
				8.0 V ≤ V_{IN} ≤ 20 V	—	45	100	
Load regulation	Reg·load	1	T_j = 25°C	1.0 mA ≤ I_{OUT} ≤ 100 mA	—	11	60	mV
				1.0 mA ≤ I_{OUT} ≤ 40 mA	—	5.0	30	
Output voltage	V_{OUT}	1	T_j = 25°C	7.0 V ≤ V_{IN} ≤ 20 V, 1.0 mA ≤ I_{OUT} ≤ 40 mA	4.75	—	5.25	V
				1.0 mA ≤ I_{OUT} ≤ 70 mA	4.75	—	5.25	
Quiescent current	I_B	1	T_j = 25°C		—	3.1	6.0	mA
			T_j = 125°C		—	—	5.5	
Quiescent current change	ΔI_B	1	T_j = 25°C	8.0 V ≤ V_{IN} ≤ 20 V	—	—	1.5	mA
				1.0 mA ≤ I_{OUT} ≤ 40 mA	—	—	0.1	
Output noise voltage	V_{NO}	2	Ta = 25°C, 10 Hz ≤ f ≤ 100 kHz		—	40	—	μV_{rms}
Long term stability	$\Delta V_{OUT}/\Delta t$	1	—		—	12	—	mV/kh
Ripple rejection	R.R.	3	f = 120 Hz, 8.0 V ≤ V_{IN} ≤ 18 V, T_j = 25°C		41	49	—	dB
Dropout voltage	V_D	1	T_j = 25°C, I_{OUT} = 150 mA		—	1.7	—	V
Average temperature coefficient of output voltage	T_{CVO}	1	I_{OUT} = 5 mA		—	−0.6	—	mV/°C

TA78L006AP
Electrical Characteristics
(Unless otherwise specified, V_{IN} = 11 V, I_{OUT} = 40 mA, C_{IN} = 0.33 μF, C_{OUT} = 0.1 μF, 0°C ≤ T_j ≤ 125°C)

Characteristics	Symbol	Test Circuit	Test Condition		Min	Typ.	Max	Unit
Output voltage	V_{OUT}	1	T_j = 25°C		5.76	6.0	6.24	V
Line regulation	Reg·line	1	T_j = 25°C	8.1 V ≤ V_{IN} ≤ 21 V	—	50	150	mV
				9.0 V ≤ V_{IN} ≤ 21 V	—	45	110	
Load regulation	Reg·load	1	T_j = 25°C	1.0 mA ≤ I_{OUT} ≤ 100 mA	—	12	70	mV
				1.0 mA ≤ I_{OUT} ≤ 40 mA	—	5.5	35	
Output voltage	V_{OUT}	1	T_j = 25°C	8.1 V ≤ V_{IN} ≤ 21 V, 1.0 mA ≤ I_{OUT} ≤ 40 mA	5.7	—	6.3	V
				1.0 mA ≤ I_{OUT} ≤ 70 mA	5.7	—	6.3	
Quiescent current	I_B	1	T_j = 25°C		—	3.1	6.0	mA
			T_j = 125°C		—	—	5.5	
Quiescent current change	ΔI_B	1	T_j = 25°C	9.0 V ≤ V_{IN} ≤ 20 V	—	—	1.5	mA
				1.0 mA ≤ I_{OUT} ≤ 40 mA	—	—	0.1	
Output noise voltage	V_{NO}	2	Ta = 25°C, 10 Hz ≤ f ≤ 100 kHz		—	40	—	μV_{rms}
Long term stability	$\Delta V_{OUT}/\Delta t$	1	—		—	14	—	mV/kh
Ripple rejection	R.R.	3	f = 120 Hz, 9.0 V ≤ V_{IN} ≤ 19 V, T_j = 25°C		39	47	—	dB
Dropout voltage	V_D	1	T_j = 25°C, I_{OUT} = 150 mA		—	1.7	—	V
Average temperature coefficient of output voltage	T_{CVO}	1	I_{OUT} = 5 mA		—	−0.7	—	mV/°C

TA78L007AP
Electrical Characteristics
(Unless otherwise specified, V_{IN} = 12 V, I_{OUT} = 40 mA, C_{IN} = 0.33 μF, C_{OUT} = 0.1 μF, 0°C ≤ T_j ≤ 125°C)

Characteristics	Symbol	Test Circuit	Test Condition		Min	Typ.	Max	Unit
Output voltage	V_{OUT}	1	T_j = 25°C		6.72	7.0	7.28	V
Line regulation	Reg·line	1	T_j = 25°C	9.2 V ≤ V_{IN} ≤ 22 V	—	50	160	mV
				10 V ≤ V_{IN} ≤ 22 V	—	45	115	
Load regulation	Reg·load	1	T_j = 25°C	1.0 mA ≤ I_{OUT} ≤ 100 mA	—	13	75	mV
				1.0 mA ≤ I_{OUT} ≤ 40 mA	—	6.0	40	
Output voltage	V_{OUT}	1	T_j = 25°C	9.2 V ≤ V_{IN} ≤ 22 V, 1.0 mA ≤ I_{OUT} ≤ 40 mA	6.65	—	7.35	V
				1.0 mA ≤ I_{OUT} ≤ 70 mA	6.65	—	7.35	
Quiescent current	I_B	1	T_j = 25°C		—	3.1	6.5	mA
			T_j = 125°C		—	—	6.0	
Quiescent current change	ΔI_B	1	T_j = 25°C	10 V ≤ V_{IN} ≤ 22 V	—	—	1.5	mA
				1.0 mA ≤ I_{OUT} ≤ 40 mA	—	—	0.1	
Output noise voltage	V_{NO}	2	Ta = 25°C, 10 Hz ≤ f ≤ 100 kHz		—	50	—	μV_{rms}
Long term stability	$\Delta V_{OUT}/\Delta t$	1	—		—	17	—	mV/kh
Ripple rejection	R.R.	3	f = 120 Hz, 10 V ≤ V_{IN} ≤ 20 V, T_j = 25°C		37	46	—	dB
Dropout voltage	V_D	1	T_j = 25°C, I_{OUT} = 150 mA		—	1.7	—	V
Average temperature coefficient of output voltage	T_{CVO}	1	I_{OUT} = 5 mA		—	−0.75	—	mV/°C

TA78L075AP
Electrical Characteristics
(Unless otherwise specified, V_{IN} = 13 V, I_{OUT} = 40 mA, C_{IN} = 0.33 μF, C_{OUT} = 0.1 μF, 0°C ≤ T_j ≤ 125°C)

Characteristics	Symbol	Test Circuit	Test Condition		Min	Typ.	Max	Unit
Output voltage	V_{OUT}	1	T_j = 25°C		7.21	7.5	7.79	V
Line regulation	Reg·line	1	T_j = 25°C	9.8 V ≤ V_{IN} ≤ 23 V	—	40	170	mV
				10.5 V ≤ V_{IN} ≤ 23 V	—	40	120	
Load regulation	Reg·load	1	T_j = 25°C	1.0 mA ≤ I_{OUT} ≤ 100 mA	—	14	80	mV
				1.0 mA ≤ I_{OUT} ≤ 40 mA	—	6.5	40	
Output voltage	V_{OUT}	1	T_j = 25°C	9.8 V ≤ V_{IN} ≤ 23 V, 1.0 mA ≤ I_{OUT} ≤ 40 mA	7.125	—	7.875	V
				1.0 mA ≤ I_{OUT} ≤ 70 mA	7.125	—	7.875	
Quiescent current	I_B	1	T_j = 25°C		—	3.1	6.5	mA
			T_j = 125°C		—	—	6.0	
Quiescent current change	ΔI_B	1	T_j = 25°C	10.5 V ≤ V_{IN} ≤ 23 V	—	—	1.5	mA
				1.0 mA ≤ I_{OUT} ≤ 40 mA	—	—	0.1	
Output noise voltage	V_{NO}	2	Ta = 25°C, 10 Hz ≤ f ≤ 100 kHz		—	60	—	μV_{rms}
Long term stability	$\Delta V_{OUT}/\Delta t$	1	—		—	19	—	mV/kh
Ripple rejection	R.R.	3	f = 120 Hz, 11 V ≤ V_{IN} ≤ 21 V, T_j = 25°C		37	45	—	dB
Dropout voltage	V_D	1	T_j = 25°C, I_{OUT} = 150 mA		—	1.7	—	V
Average temperature coefficient of output voltage	T_{CVO}	1	I_{OUT} = 5 mA		—	−0.75	—	mV/°C

TA78L008AP
Electrical Characteristics
(Unless otherwise specified, V_{IN} = 14 V, I_{OUT} = 40 mA, C_{IN} = 0.33 μF, C_{OUT} = 0.1 μF, 0°C ≤ T_j ≤ 125°C)

Characteristics	Symbol	Test Circuit	Test Condition		Min	Typ.	Max	Unit
Output voltage	V_{OUT}	1	T_j = 25°C		7.7	8.0	8.3	V
Line regulation	Reg·line	1	T_j = 25°C	10.5 V ≤ V_{IN} ≤ 23 V	—	20	175	mV
				11 V ≤ V_{IN} ≤ 23 V	—	12	125	
Load regulation	Reg·load	1	T_j = 25°C	1.0 mA ≤ I_{OUT} ≤ 100 mA	—	15	80	mV
				1.0 mA ≤ I_{OUT} ≤ 40 mA	—	7.0	40	
Output voltage	V_{OUT}	1	T_j = 25°C	10.5 V ≤ V_{IN} ≤ 23 V, 1.0 mA ≤ I_{OUT} ≤ 40 mA	7.6	—	8.4	V
				1.0 mA ≤ I_{OUT} ≤ 70 mA	7.6	—	8.4	
Quiescent current	I_B	1	T_j = 25°C		—	3.1	6.5	mA
			T_j = 125°C		—	—	6.0	
Quiescent current change	ΔI_B	1	T_j = 25°C	11 V ≤ V_{IN} ≤ 23 V	—	—	1.5	mA
				1.0 mA ≤ I_{OUT} ≤ 40 mA	—	—	0.1	
Output noise voltage	V_{NO}	2	Ta = 25°C, 10 Hz ≤ f ≤ 100 kHz		—	60	—	μV_{rms}
Long term stability	$\Delta V_{OUT}/\Delta t$	1	—		—	20	—	mV/kh
Ripple rejection	R.R.	3	f = 120 Hz, 12 V ≤ V_{IN} ≤ 23 V, T_j = 25°C		37	45	—	dB
Dropout voltage	V_D	1	T_j = 25°C, I_{OUT} = 150 mA		—	1.7	—	V
Average temperature coefficient of output voltage	T_{CVO}	1	I_{OUT} = 5 mA		—	−0.8	—	mV/°C

TA78L009AP
Electrical Characteristics
(Unless otherwise specified, V_{IN} = 15 V, I_{OUT} = 40 mA, C_{IN} = 0.33 μF, C_{OUT} = 0.1 μF, 0°C ≤ T_j ≤ 125°C)

Characteristics	Symbol	Test Circuit	Test Condition		Min	Typ.	Max	Unit
Output voltage	V_{OUT}	1	T_j = 25°C		8.64	9.0	9.36	V
Line regulation	Reg·line	1	T_j = 25°C	11.4 V ≤ V_{IN} ≤ 24 V	—	80	200	mV
				12 V ≤ V_{IN} ≤ 24 V	—	20	160	
Load regulation	Reg·load	1	T_j = 25°C	1.0 mA ≤ I_{OUT} ≤ 100 mA	—	17	90	mV
				1.0 mA ≤ I_{OUT} ≤ 40 mA	—	8.0	45	
Output voltage	V_{OUT}	1	T_j = 25°C	11.4 V ≤ V_{IN} ≤ 24 V, 1.0 mA ≤ I_{OUT} ≤ 40 mA	8.55	—	9.45	V
				1.0 mA ≤ I_{OUT} ≤ 70 mA	8.55	—	9.45	
Quiescent current	I_B	1	T_j = 25°C		—	3.2	6.5	mA
			T_j = 125°C		—	—	6.0	
Quiescent current change	ΔI_B	1	T_j = 25°C	12 V ≤ V_{IN} ≤ 24 V	—	—	1.5	mA
				1.0 mA ≤ I_{OUT} ≤ 40 mA	—	—	0.1	
Output noise voltage	V_{NO}	2	Ta = 25°C, 10 Hz ≤ f ≤ 100 kHz		—	65	—	μV_{rms}
Long term stability	$\Delta V_{OUT}/\Delta t$	1	—		—	21	—	mV/kh
Ripple rejection	R.R.	3	f = 120 Hz, 12 V ≤ V_{IN} ≤ 24 V, T_j = 25°C		36	44	—	dB
Dropout voltage	V_D	1	T_j = 25°C, I_{OUT} = 150 mA		—	1.7	—	V
Average temperature coefficient of output voltage	T_{CVO}	1	I_{OUT} = 5 mA		—	−0.85	—	mV/°C

TA78L010AP
Electrical Characteristics
(Unless otherwise specified, V_{IN} = 16 V, I_{OUT} = 40 mA, C_{IN} = 0.33 μF, C_{OUT} = 0.1 μF, 0°C ≤ T_j ≤ 125°C)

Characteristics	Symbol	Test Circuit	Test Condition		Min	Typ.	Max	Unit
Output voltage	V_{OUT}	1	T_j = 25°C		9.6	10	10.4	V
Line regulation	Reg·line	1	T_j = 25°C	12.5 V ≤ V_{IN} ≤ 25 V	—	80	230	mV
				13 V ≤ V_{IN} ≤ 25 V	—	30	170	
Load regulation	Reg·load	1	T_j = 25°C	1.0 mA ≤ I_{OUT} ≤ 100 mA	—	18	90	mV
				1.0 mA ≤ I_{OUT} ≤ 40 mA	—	8.5	45	
Output voltage	V_{OUT}	1	T_j = 25°C	12.5 V ≤ V_{IN} ≤ 25 V, 1.0 mA ≤ I_{OUT} ≤ 40 mA	9.5	—	10.5	V
				1.0 mA ≤ I_{OUT} ≤ 70 mA	9.5	—	10.5	
Quiescent current	I_B	1	T_j = 25°C		—	3.2	6.5	mA
			T_j = 125°C		—	—	6.0	
Quiescent current change	ΔI_B	1	T_j = 25°C	13 V ≤ V_{IN} ≤ 25 V	—	—	1.5	mA
				1.0 mA ≤ I_{OUT} ≤ 40 mA	—	—	0.1	
Output noise voltage	V_{NO}	2	Ta = 25°C, 10 Hz ≤ f ≤ 100 kHz		—	70	—	μV_{rms}
Long term stability	$\Delta V_{OUT}/\Delta t$	1	—		—	22	—	mV/kh
Ripple rejection	R.R.	3	f = 120 Hz, 13 V ≤ V_{IN} ≤ 24 V, T_j = 25°C		36	43	—	dB
Dropout voltage	V_D	1	T_j = 25°C, I_{OUT} = 150 mA		—	1.7	—	V
Average temperature coefficient of output voltage	T_{CVO}	1	I_{OUT} = 5 mA		—	−0.9	—	mV/°C

TA78L012AP
Electrical Characteristics
(Unless otherwise specified, V_{IN} = 19 V, I_{OUT} = 40 mA, C_{IN} = 0.33 μF, C_{OUT} = 0.1 μF, 0°C ≤ T_j ≤ 125°C)

Characteristics	Symbol	Test Circuit	Test Condition		Min	Typ.	Max	Unit
Output voltage	V_{OUT}	1	T_j = 25°C		11.5	12	12.5	V
Line regulation	Reg·line	1	T_j = 25°C	14.5 V ≤ V_{IN} ≤ 27 V	—	120	250	mV
				16 V ≤ V_{IN} ≤ 27 V	—	100	200	
Load regulation	Reg·load	1	T_j = 25°C	1.0 mA ≤ I_{OUT} ≤ 100 mA	—	20	100	mV
				1.0 mA ≤ I_{OUT} ≤ 40 mA	—	10	50	
Output voltage	V_{OUT}	1	T_j = 25°C	14.5 V ≤ V_{IN} ≤ 27 V, 1.0 mA ≤ I_{OUT} ≤ 40 mA	11.4	—	12.6	V
				1.0 mA ≤ I_{OUT} ≤ 70 mA	11.4	—	12.6	
Quiescent current	I_B	1	T_j = 25°C		—	3.2	6.5	mA
			T_j = 125°C		—	—	6.0	
Quiescent current change	ΔI_B	1	T_j = 25°C	16 V ≤ V_{IN} ≤ 27 V	—	—	1.5	mA
				1.0 mA ≤ I_{OUT} ≤ 40 mA	—	—	0.1	
Output noise voltage	V_{NO}	2	Ta = 25°C, 10 Hz ≤ f ≤ 100 kHz		—	80	—	μV_{rms}
Long term stability	$\Delta V_{OUT}/\Delta t$	1	—		—	24	—	mV/kh
Ripple rejection	R.R.	3	f = 120 Hz, 15 V ≤ V_{IN} ≤ 25 V, T_j = 25°C		36	41	—	dB
Dropout voltage	V_D	1	T_j = 25°C, I_{OUT} = 150 mA		—	1.7	—	V
Average temperature coefficient of output voltage	T_{CVO}	1	I_{OUT} = 5 mA		—	−1.0	—	mV/°C

TA78L132AP
Electrical Characteristics
(Unless otherwise specified, V_{IN} = 21 V, I_{OUT} = 40 mA, C_{IN} = 0.33 μF, C_{OUT} = 0.1 μF, 0°C ≤ T_j ≤ 125°C)

Characteristics	Symbol	Test Circuit	Test Condition		Min	Typ.	Max	Unit
Output voltage	V_{OUT}	1	T_j = 25°C		12.67	13.2	13.73	V
Line regulation	Reg·line	1	T_j = 25°C	16 V ≤ V_{IN} ≤ 28 V	—	125	270	mV
				17 V ≤ V_{IN} ≤ 28 V	—	105	225	
Load regulation	Reg·load	1	T_j = 25°C	1.0 mA ≤ I_{OUT} ≤ 100 mA	—	22	120	mV
				1.0 mA ≤ I_{OUT} ≤ 40 mA	—	11	60	
Output voltage	V_{OUT}	1	T_j = 25°C	16 V ≤ V_{IN} ≤ 28 V, 1.0 mA ≤ I_{OUT} ≤ 40 mA	12.54	—	13.86	V
				1.0 mA ≤ I_{OUT} ≤ 70 mA	12.54	—	13.86	
Quiescent current	I_B	1	T_j = 25°C		—	3.2	6.5	mA
			T_j = 125°C		—	—	6.0	
Quiescent current change	ΔI_B	1	T_j = 25°C	17 V ≤ V_{IN} ≤ 28 V	—	—	1.5	mA
				1.0 mA ≤ I_{OUT} ≤ 40 mA	—	—	0.1	
Output noise voltage	V_{NO}	2	Ta = 25°C, 10 Hz ≤ f ≤ 100 kHz		—	90	—	μV_{rms}
Long term stability	$\Delta V_{OUT}/\Delta t$	1	—		—	28	—	mV/kh
Ripple rejection	R.R.	3	f = 120 Hz, 17 V ≤ V_{IN} ≤ 27 V, T_j = 25°C		34	41	—	dB
Dropout voltage	V_D	1	T_j = 25°C, I_{OUT} = 150 mA		—	1.7	—	V
Average temperature coefficient of output voltage	T_{CVO}	1	I_{OUT} = 5 mA		—	−1.2	—	mV/°C

TA78L015AP
Electrical Characteristics
(Unless otherwise specified, V_{IN} = 23 V, I_{OUT} = 40 mA, C_{IN} = 0.33 μF, C_{OUT} = 0.1 μF, 0°C ≤ T_j ≤ 125°C)

Characteristics	Symbol	Test Circuit	Test Condition		Min	Typ.	Max	Unit
Output voltage	V_{OUT}	1	T_j = 25°C		14.4	15	15.6	V
Line regulation	Reg·line	1	T_j = 25°C	17.5 V ≤ V_{IN} ≤ 30 V	—	130	300	mV
				20 V ≤ V_{IN} ≤ 30 V	—	110	250	
Load regulation	Reg·load	1	T_j = 25°C	1.0 mA ≤ I_{OUT} ≤ 100 mA	—	25	150	mV
				1.0 mA ≤ I_{OUT} ≤ 40 mA	—	12	75	
Output voltage	V_{OUT}	1	T_j = 25°C	17.5 V ≤ V_{IN} ≤ 30 V, 1.0 mA ≤ I_{OUT} ≤ 40 mA	14.25	—	15.75	V
				1.0 mA ≤ I_{OUT} ≤ 70 mA	14.25	—	15.75	
Quiescent current	I_B	1	T_j = 25°C		—	3.3	6.5	mA
			T_j = 125°C		—	—	6.0	
Quiescent current change	ΔI_B	1	T_j = 25°C	20 V ≤ V_{IN} ≤ 30 V	—	—	1.5	mA
				1.0 mA ≤ I_{OUT} ≤ 40 mA	—	—	0.1	
Output noise voltage	V_{NO}	2	Ta = 25°C, 10 Hz ≤ f ≤ 100 kHz		—	90	—	μV_{rms}
Long term stability	$\Delta V_{OUT}/\Delta t$	1	—		—	30	—	mV/kh
Ripple rejection	R.R.	3	f = 120 Hz, 18.5 V ≤ V_{IN} ≤ 28.5 V, T_j = 25°C		34	40	—	dB
Dropout voltage	V_D	1	T_j = 25°C, I_{OUT} = 150 mA		—	1.7	—	V
Average temperature coefficient of output voltage	T_{CVO}	1	I_{OUT} = 5 mA		—	−1.3	—	mV/°C

TA78L018AP
Electrical Characteristics
(Unless otherwise specified, V_{IN} = 27 V, I_{OUT} = 40 mA, C_{IN} = 0.33 μF, C_{OUT} = 0.1 μF, 0°C ≤ T_j ≤ 125°C)

Characteristics	Symbol	Test Circuit	Test Condition		Min	Typ.	Max	Unit
Output voltage	V_{OUT}	1	T_j = 25°C		17.3	18	18.7	V
Line regulation	Reg·line	1	T_j = 25°C	21.4 V ≤ V_{IN} ≤ 33 V	—	32	325	mV
				22 V ≤ V_{IN} ≤ 33 V	—	27	275	
Load regulation	Reg·load	1	T_j = 25°C	1.0 mA ≤ I_{OUT} ≤ 100 mA	—	30	170	mV
				1.0 mA ≤ I_{OUT} ≤ 40 mA	—	15	75	
Output voltage	V_{OUT}	1	T_j = 25°C	21.4 V ≤ V_{IN} ≤ 33 V, 1.0 mA ≤ I_{OUT} ≤ 40 mA	17.1	—	18.9	V
				1.0 mA ≤ I_{OUT} ≤ 70 mA	17.1	—	18.9	
Quiescent current	I_B	1	T_j = 25°C		—	3.3	6.5	mA
			T_j = 125°C		—	—	6.0	
Quiescent current change	ΔI_B	1	T_j = 25°C	22 V ≤ V_{IN} ≤ 33 V	—	—	1.5	mA
				1.0 mA ≤ I_{OUT} ≤ 40 mA	—	—	0.1	
Output noise voltage	V_{NO}	2	Ta = 25°C, 10 Hz ≤ f ≤ 100 kHz		—	150	—	μV_{rms}
Long term stability	$\Delta V_{OUT}/\Delta t$	1	—		—	45	—	mV/kh
Ripple rejection	R.R.	3	f = 120 Hz, 23 V ≤ V_{IN} ≤ 33 V, T_j = 25°C		32	38	—	dB
Dropout voltage	V_D	1	T_j = 25°C, I_{OUT} = 150 mA		—	1.7	—	V
Average temperature coefficient of output voltage	T_{CVO}	1	I_{OUT} = 5 mA		—	−1.5	—	mV/°C

TA78L020AP
Electrical Characteristics
(Unless otherwise specified, V_{IN} = 29 V, I_{OUT} = 40 mA, C_{IN} = 0.33 μF, C_{OUT} = 0.1 μF, 0°C ≤ T_j ≤ 125°C)

Characteristics	Symbol	Test Circuit	Test Condition		Min	Typ.	Max	Unit
Output voltage	V_{OUT}	1	T_j = 25°C		19.2	20	20.8	V
Line regulation	Reg·line	1	T_j = 25°C	23.5 V ≤ V_{IN} ≤ 35 V	—	33	330	mV
				24 V ≤ V_{IN} ≤ 35 V	—	28	285	
Load regulation	Reg·load	1	T_j = 25°C	1.0 mA ≤ I_{OUT} ≤ 100 mA	—	33	180	mV
				1.0 mA ≤ I_{OUT} ≤ 40 mA	—	17	90	
Output voltage	V_{OUT}	1	T_j = 25°C	23.5 V ≤ V_{IN} ≤ 35 V, 1.0 mA ≤ I_{OUT} ≤ 40 mA	19.0	—	21.0	V
				1.0 mA ≤ I_{OUT} ≤ 70 mA	19.0	—	21.0	
Quiescent current	I_B	1	T_j = 25°C		—	3.3	6.5	mA
			T_j = 125°C		—	—	6.0	
Quiescent current change	ΔI_B	1	T_j = 25°C	24 V ≤ V_{IN} ≤ 35 V	—	—	1.5	mA
				1.0 mA ≤ I_{OUT} ≤ 40 mA	—	—	0.1	
Output noise voltage	V_{NO}	2	Ta = 25°C, 10 Hz ≤ f ≤ 100 kHz		—	170	—	μV_{rms}
Long term stability	$\Delta V_{OUT}/\Delta t$	1	—		—	49	—	mV/kh
Ripple rejection	R.R.	3	f = 120 Hz, 25 V ≤ V_{IN} ≤ 35 V, T_j = 25°C		31	37	—	dB
Dropout voltage	V_D	1	T_j = 25°C, I_{OUT} = 150 mA		—	1.7	—	V
Average temperature coefficient of output voltage	T_{CVO}	1	I_{OUT} = 5 mA		—	−1.7	—	mV/°C

TA78L024AP
Electrical Characteristics
(Unless otherwise specified, V_{IN} = 33 V, I_{OUT} = 40 mA, C_{IN} = 0.33 μF, C_{OUT} = 0.1 μF, 0°C ≤ T_j ≤ 125°C)

Characteristics	Symbol	Test Circuit	Test Condition		Min	Typ.	Max	Unit
Output voltage	V_{OUT}	1	T_j = 25°C		23	24	25	V
Line regulation	Reg·line	1	T_j = 25°C	27.5 V ≤ V_{IN} ≤ 38 V	—	35	350	mV
				28 V ≤ V_{IN} ≤ 38 V	—	30	300	
Load regulation	Reg·load	1	T_j = 25°C	1.0 mA ≤ I_{OUT} ≤ 100 mA	—	40	200	mV
				1.0 mA ≤ I_{OUT} ≤ 40 mA	—	20	100	
Output voltage	V_{OUT}	1	T_j = 25°C	27.5 V ≤ V_{IN} ≤ 38 V, 1.0 mA ≤ I_{OUT} ≤ 40 mA	22.8	—	25.2	V
				1.0 mA ≤ I_{OUT} ≤ 70 mA	22.8	—	25.2	
Quiescent current	I_B	1	T_j = 25°C		—	3.5	6.5	mA
			T_j = 125°C		—	—	6.0	
Quiescent current change	ΔI_B	1	T_j = 25°C	28 V ≤ V_{IN} ≤ 38 V	—	—	1.5	mA
				1.0 mA ≤ I_{OUT} ≤ 40 mA	—	—	0.1	
Output noise voltage	V_{NO}	2	Ta = 25°C, 10 Hz ≤ f ≤ 100 kHz		—	200	—	μV_{rms}
Long term stability	$\Delta V_{OUT}/\Delta t$	1	—		—	56	—	mV/kh
Ripple rejection	R.R.	3	f = 120 Hz, 29 V ≤ V_{IN} ≤ 39 V, T_j = 25°C		31	35	—	dB
Dropout voltage	V_D	1	T_j = 25°C, I_{OUT} = 150 mA		—	1.7	—	V
Average temperature coefficient of output voltage	T_{CVO}	1	I_{OUT} = 5 mA		—	−2.0	—	mV/°C

Test Circuit 1/Standard Application

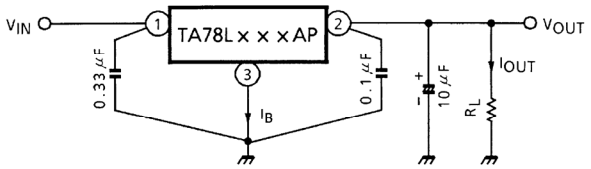

Test Circuit 2

V_{NO}

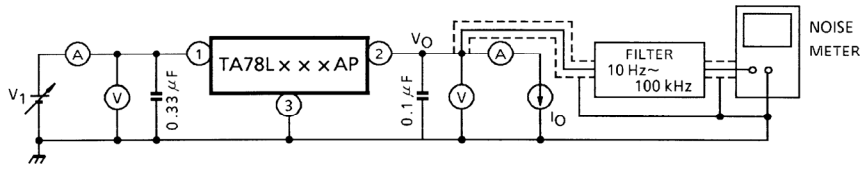

Test Circuit 3

R.R.

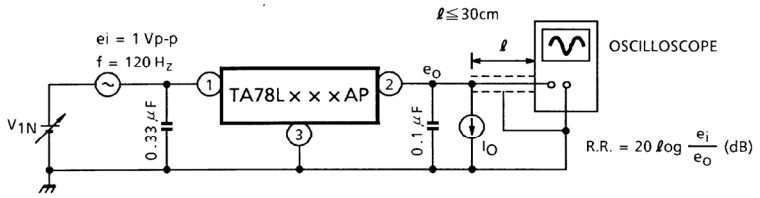

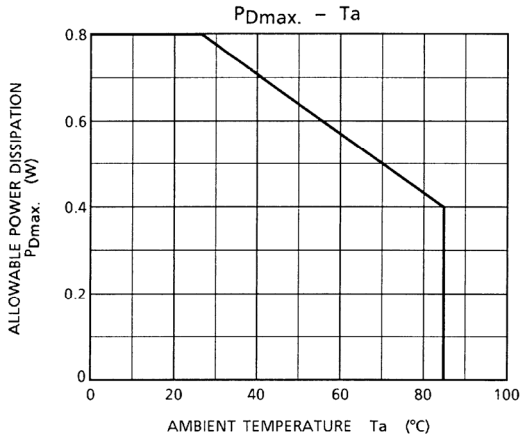
PDmax. – Ta
ALLOWABLE POWER DISSIPATION PDmax. (W)
0.8
0.6
0.4
0.2
0
0
20
40
60
80
100
AMBIENT TEMPERATURE Ta (°C)

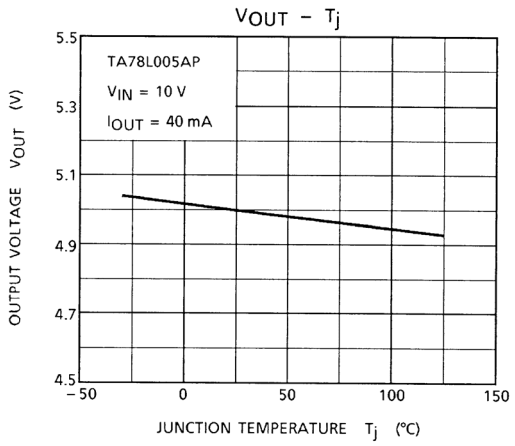
VOUT – Tj
TA78L005AP
VIN = 10 V
IOUT = 40 mA
OUTPUT VOLTAGE VOUT (V)
5.5
5.3
5.1
4.9
4.7
4.5
– 50
0
50
100
150
JUNCTION TEMPERATURE Tj (°C)

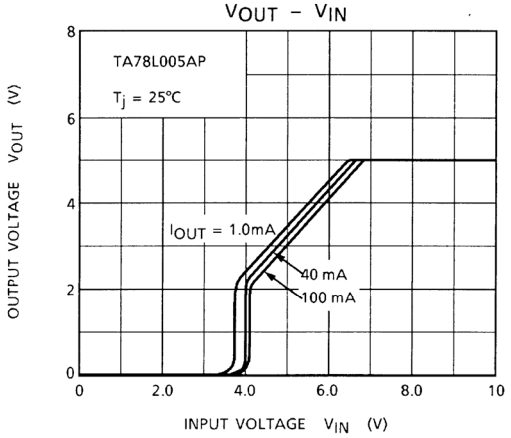
VOUT – VIN
TA78L005AP
Tj = 25°C
OUTPUT VOLTAGE VOUT (V)
IOUT = 1.0mA
40 mA
100 mA
8
6
4
2
0
0
2.0
4.0
6.0
8.0
10
INPUT VOLTAGE VIN (V)

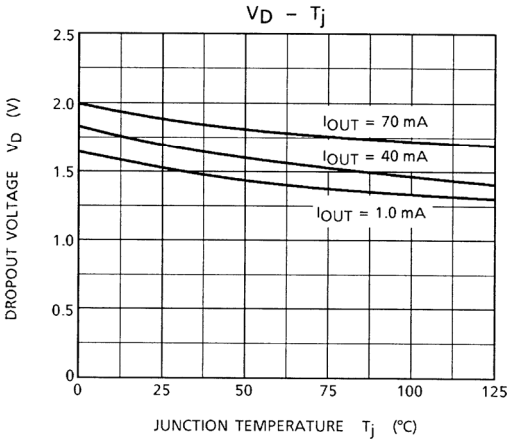
VD – Tj
DROPOUT VOLTAGE VD (V)
IOUT = 70 mA
IOUT = 40 mA
IOUT = 1.0 mA
2.5
2.0
1.5
1.0
0.5
0
0
25
50
75
100
125
JUNCTION TEMPERATURE Tj (°C)

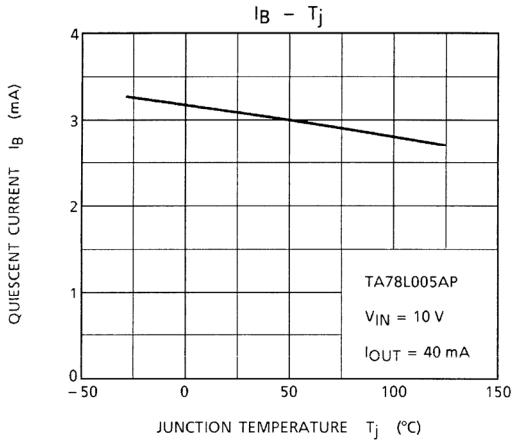
IB – Tj
QUIESCENT CURRENT IB (mA)
TA78L005AP
VIN = 10 V
IOUT = 40 mA
4
3
2
1
0
– 50
0
50
100
150
JUNCTION TEMPERATURE Tj (°C)

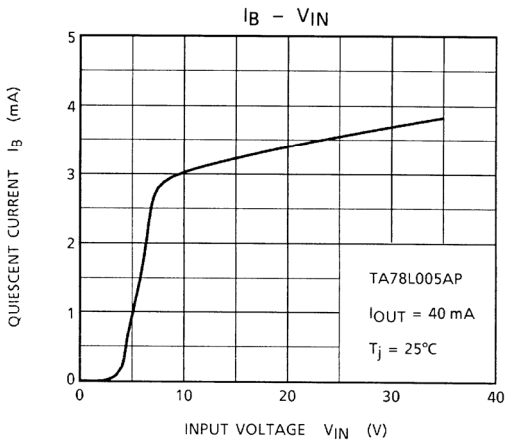
IB – VIN
QUIESCENT CURRENT IB (mA)
TA78L005AP
IOUT = 40 mA
Tj = 25°C
5
4
3
2
1
0
0
10
20
30
40
INPUT VOLTAGE VIN (V)

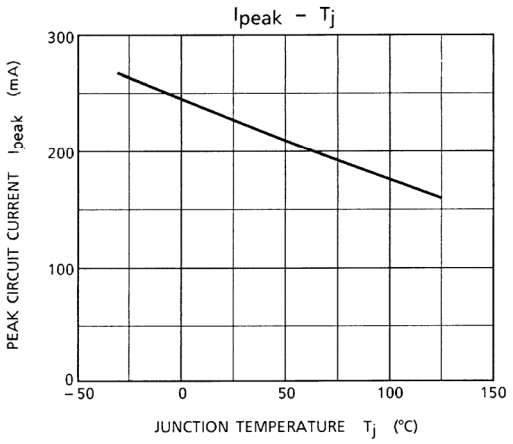
Ipeak – Tj
PEAK CIRCUIT CURRENT Ipeak (mA)
300
200
100
0
– 50
0
50
100
150
JUNCTION TEMPERATURE Tj (°C)

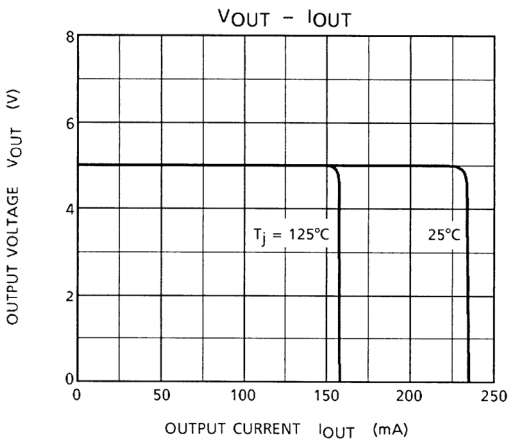
VOUT – IOUT
OUTPUT VOLTAGE VOUT (V)
8
6
4
2
0
Tj = 125°C
25°C
0
50
100
150
200
250
OUTPUT CURRENT IOUT (mA)

Precautions for Use

Destruction of the IC may occur if high voltage in excess of the IC output voltage (typ. value) is applied to the IC output terminal. In this case, connect a Zener diode between the output terminal and GND to prevent any application of excessive voltage. In particular, in a current boosting circuit such as that shown in Application Circuit Example (2), if the input voltage is suddenly applied by stages and furthermore, load is light, excessive voltage may be applied transiently to the output terminal of the IC. In such a case, it may become necessary to increase the capacity of the output capacitor as appropriate, use a smaller R_1 (a resistor for bypassing IC bias current) or gradually raise the input voltage in addition to using a Zener diode as mentioned above.

Application Circuits

(1) Standard Application

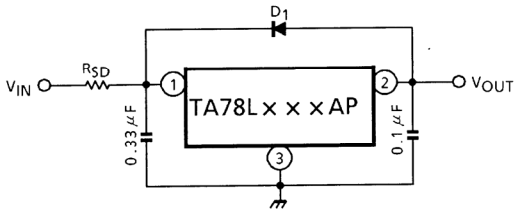

D_1 : IC protective diode
When surge voltage is applied to IC output terminal or $V_{IN} < V_{OUT}$ at the time of power ON / OFF, always connect the high speed switching diode D_1.

R_{SD} : Power limiting resistor
If V_{IN} is too high, always connect R_{SD} in order to reduce power consumption of IC.

(2) A. Current Boost Voltage Regulator

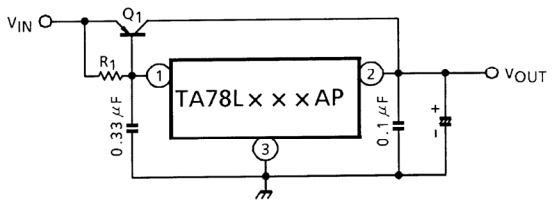

Use a required radiation plate for Q_1.

$$R_1 \leq \frac{V_{BE1}}{I_B\ MAX}$$

where, V_{BE1} : V_{BE} of external transistor Q_1.
I_B MAX : Max. bias current of IC.

B. Short-Circuit Protection

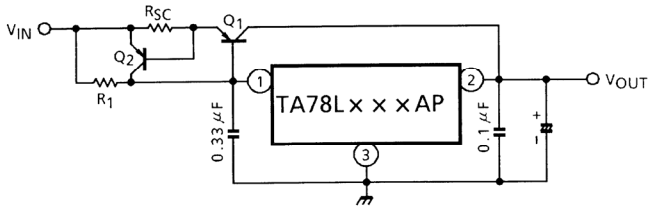

$$R_{SC} = \frac{V_{BE2}}{I_{SC}}$$

where, I_{SC} : Short-Circuit current

(3) Current Regulator

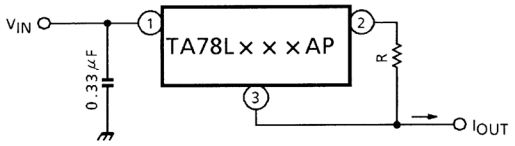

$$I_{OUT} = \frac{V_{OUT}}{R} + I_B$$

(4) Voltage Boost Regulator

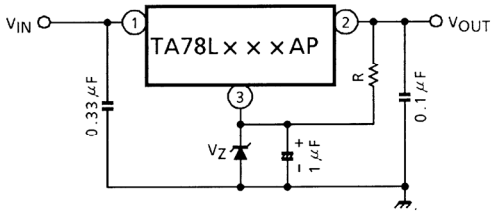

$V_{OUT} = V_Z + V_{OUT}$ (of IC)
Apply current of several mA to R.

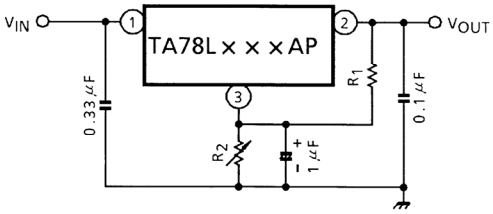

$V_{OUT} = R_2 (I_B \cdot \frac{V_{OUT}\text{ (of IC)}}{R_1}) + V_{OUT}$ (of IC)

(5) Negative Regulator

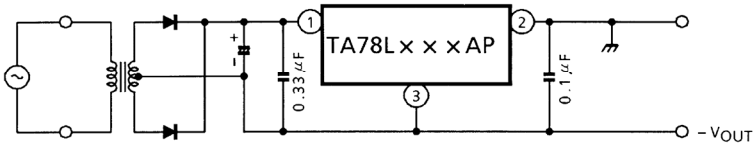

(6) Positive and Negative Regulator

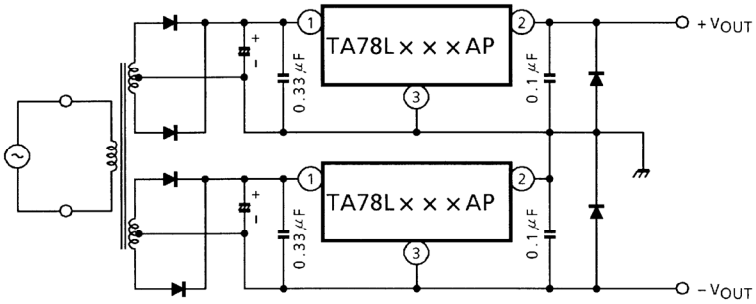

Package Dimensions

SSIP3-P-1.27 Unit : mm

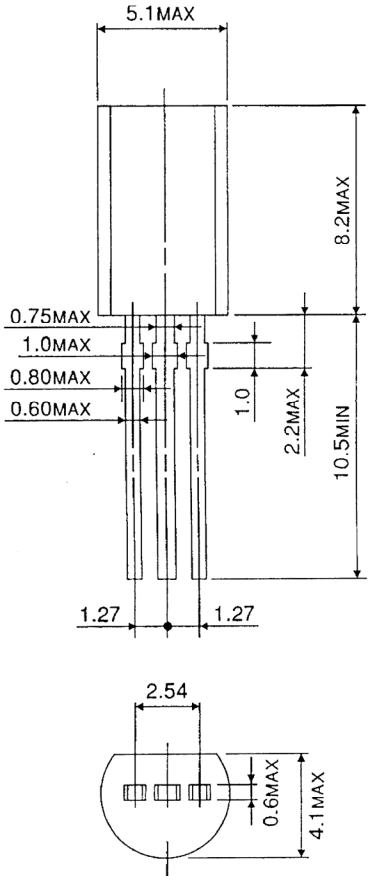

Weight : 0.36 g (Typ.)

RESTRICTIONS ON PRODUCT USE

030619EBA

- The information contained herein is subject to change without notice.
- The information contained herein is presented only as a guide for the applications of our products. No responsibility is assumed by TOSHIBA for any infringements of patents or other rights of the third parties which may result from its use. No license is granted by implication or otherwise under any patent or patent rights of TOSHIBA or others.
- TOSHIBA is continually working to improve the quality and reliability of its products. Nevertheless, semiconductor devices in general can malfunction or fail due to their inherent electrical sensitivity and vulnerability to physical stress. It is the responsibility of the buyer, when utilizing TOSHIBA products, to comply with the standards of safety in making a safe design for the entire system, and to avoid situations in which a malfunction or failure of such TOSHIBA products could cause loss of human life, bodily injury or damage to property.
  In developing your designs, please ensure that TOSHIBA products are used within specified operating ranges as set forth in the most recent TOSHIBA products specifications. Also, please keep in mind the precautions and conditions set forth in the “Handling Guide for Semiconductor Devices,” or “TOSHIBA Semiconductor Reliability Handbook” etc..
- The TOSHIBA products listed in this document are intended for usage in general electronics applications (computer, personal equipment, office equipment, measuring equipment, industrial robotics, domestic appliances, etc.). These TOSHIBA products are neither intended nor warranted for usage in equipment that requires extraordinarily high quality and/or reliability or a malfunction or failure of which may cause loss of human life or bodily injury (“Unintended Usage”). Unintended Usage include atomic energy control instruments, airplane or spaceship instruments, transportation instruments, traffic signal instruments, combustion control instruments, medical instruments, all types of safety devices, etc.. Unintended Usage of TOSHIBA products listed in this document shall be made at the customer’s own risk.
- The products described in this document are subject to the foreign exchange and foreign trade laws.
- TOSHIBA products should not be embedded to the downstream products which are prohibited to be produced and sold, under any law and regulations.