Ferrites and accessories

Series/Type: B66311, B66206

The following products presented in this data sheet are being withdrawn.

Ordering Code	Substitute Product	Date of Withdrawal	Deadline Last Orders	Last Shipments
B66206J1106T002	B66206K1106T002	29.09.2006	31.03.2007	31.05.2007

For further information please contact your nearest EPCOS sales office, which will also support you in selecting a suitable substitute. The addresses of our worldwide sales network are presented at www.epcos.com/sales.

- To IEC 61246
- Delivery mode: single units

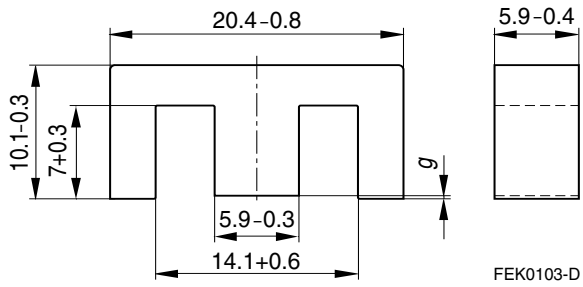

Magnetic characteristics (per set)

$\Sigma l/A$ = 1.44 mm^{-1}
l_e = 46.3 mm
A_e = 32.1 mm^2
A_{min} = 31.9 mm^2
V_e = 1490 mm^3

Approx. weight 7.3 g/set

Ungapped

Material	A_L value nH	μ_e	P_V W/set	Ordering code
N30	2150 +30/–20%	2460		B66311G0000X130
N27	1300 +30/–20%	1490	< 0.27 (200 mT, 25 kHz, 100 °C)	B66311G0000X127
N87	1470 +30/–20%	1680	< 0.75 (200 mT, 100 kHz, 100 °C)	B66311G0000X187

Gapped

Material	g mm	A_L value approx. nH	μ_e	Ordering code ** = 27 (N27) = 87 (N87)
N27, N87	0.09 ±0.01	363	415	B66311G0090X1**
	0.17 ±0.02	227	259	B66311G0170X1**
	0.25 ±0.02	171	195	B66311G0250X1**
	0.50 ±0.05	103	118	B66311G0500X1**

The A_L value in the table applies to a core set comprising one ungapped core (dimension g = 0) and one gapped core (dimension g > 0).

Calculation factors (for formulas, see *"E cores: general information"*)

Material	Relationship between air gap – A_L value		Calculation of saturation current			
	K1 (25 °C)	K2 (25 °C)	K3 (25 °C)	K4 (25 °C)	K3 (100 °C)	K4 (100 °C)
N27	61.6	–0.737	88.1	–0.847	80.9	–0.865
N87	61.6	–0.737	88.5	–0.796	78.4	–0.873

Validity range: K1, K2: 0.05 mm < s < 1.50 mm
K3, K4: 50 nH < A_L < 430 nH

Coil former (magnetic axis horizontal or vertical)

Material: GFR polyterephthalate (UL 94 V-0, insulation class to IEC 60085: F ≙ max. operating temperature 155 °C), color code black Valox 420-SE0® [E45329 (M)], GE PLASTICS B V

Solderability: to IEC 60068-2-20, test Ta, method 1 (aging 3): 235 °C, 2 s

Resistance to soldering heat: to IEC 60068-2-20, test Tb, method 1B: 350 °C, 3.5 s

Winding: see Data Book 2007, chapter “Processing notes, 2.1”

Squared pins. For matching yoke see next page.

Version	Sections	A_N mm²	l_N mm	A_R value µΩ	Pins	Ordering code
Horizontal	1	34	41.2	42	10	B66206A1110T001
Vertical	1	34	41.2	42	10	B66206J1110T001

Horizontal version

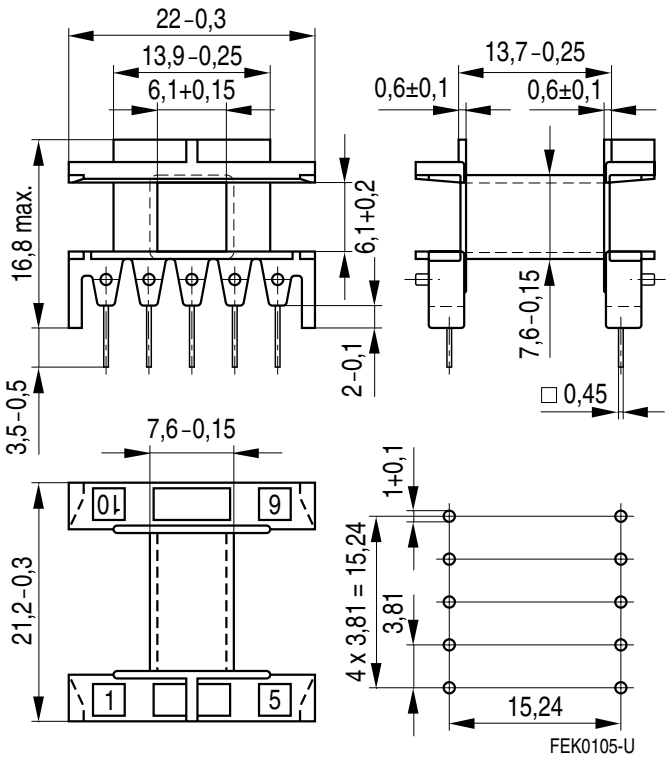

Hole arrangement
View in mounting direction

Vertical version

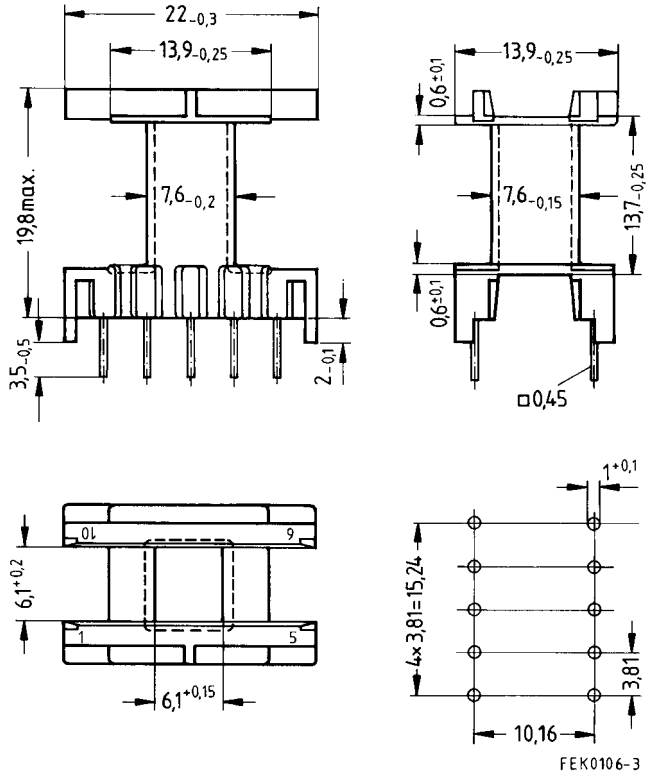

Hole arrangement
View in mounting direction

Coil former (with right-angle pins)

Material: GFR polyterephthalate (UL 94 V-0, insulation class to IEC 60085: F ≙ max. operating temperature 155 °C), color code black Pocan B4235® [E245249 (M)], LANXESS AG
Solderability: to IEC 60068-2-20, test Ta, method 1 (aging 3): 235 °C, 2 s
Resistance to soldering heat: to IEC 60068-2-20, test Tb, method 1B: 350 °C, 3.5 s
Winding: see Data Book 2007, chapter “Processing notes, 2.1”

Squared pins.

Yoke

Material: Stainless spring steel (0.2 mm)

Coil former						Ordering code
Figure	Sections	A_N mm²	l_N mm	A_R value µΩ	Pins	
1	1	34	41.2	42	12	B66206C1012T001
2	1	34	41.2	42	14	B66206C1014T001
3	Yoke (ordering code per piece, 2 are required)					B66206A2010X000

Figure 1, coil former (12 pins)

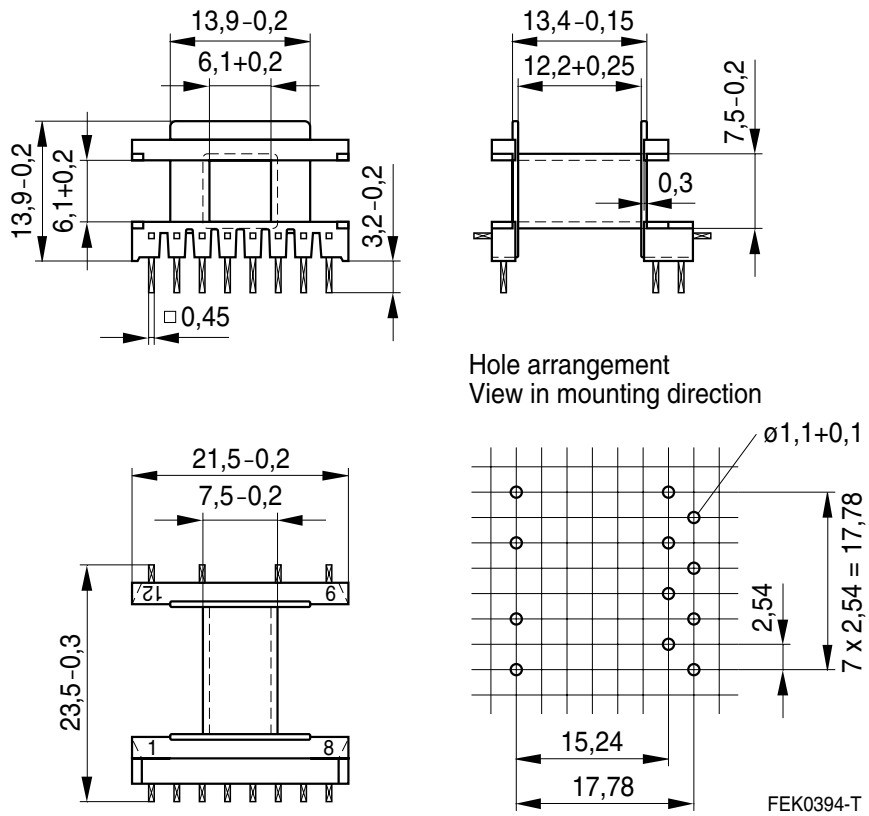

Figure 2, coil former (14 pins)

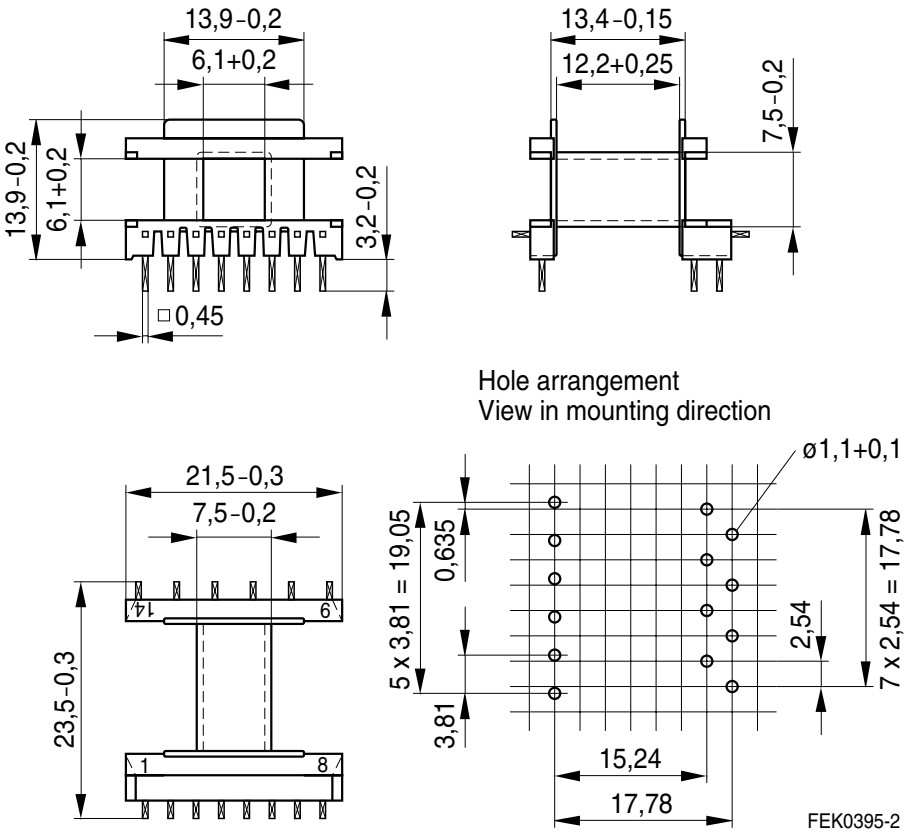

Figure 3, Yoke

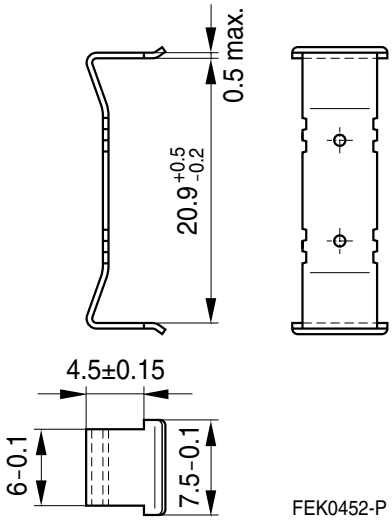

Coil former for luminaires

- Also to be used without clamps

Material: GFR polyterephthalate (UL 94 V-0, insulation class to IEC 60085: F ≙ max. operating temperature 155 °C), color code black Pocan B4235® [E245249 (M)], LANXESS AG
Solderability: to IEC 60068-2-20, test Ta, method 1 (aging 3): 235 °C, 2 s
Resistance to soldering heat: to IEC 60068-2-20, test Tb, method 1B: 350 °C, 3.5 s
Winding: see Data Book 2007, chapter “Processing notes, 2.1”

Squared pins.

Yoke

Material: Nickel silver (0.3 mm)

Sections	A_N mm²	l_N mm	A_R value µΩ	Pins	Ordering code
1	32.7	42.3	44.5	6	B66206J1106T001
2	30.7	42.3	34.4	6	B66206J1106T002
Yoke					B66206A2001X000

Coil former

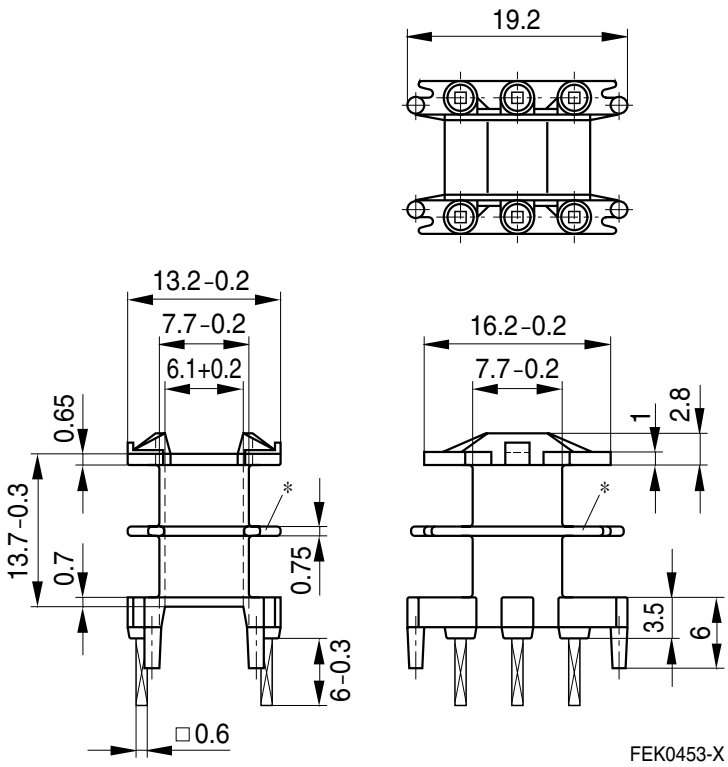

Yoke

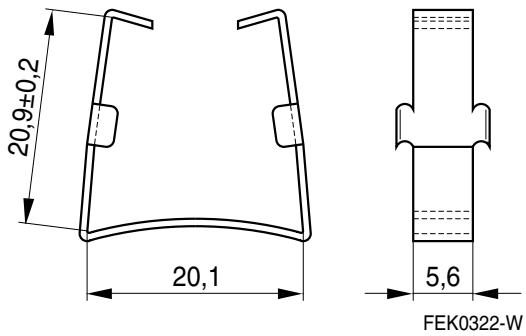

Hole arrangement
View in mounting direction

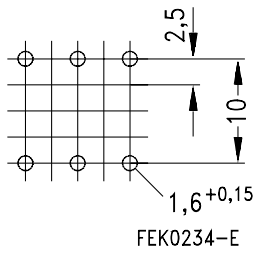

* Omitted for one-section version.

Mechanical stress and mounting

Ferrite cores have to meet mechanical requirements during assembling and for a growing number of applications. Since ferrites are ceramic materials one has to be aware of the special behavior under mechanical load.

As valid for any ceramic material, ferrite cores are brittle and sensitive to any shock, fast changing or tensile load. Especially high cooling rates under ultrasonic cleaning and high static or cyclic loads can cause cracks or failure of the ferrite cores.

For detailed information see Data Book 2007, chapter “General – Definitions, 8.1”.

Effects of core combination on A_L value

Stresses in the core affect not only the mechanical but also the magnetic properties. It is apparent that the initial permeability is dependent on the stress state of the core. The higher the stresses are in the core, the lower is the value for the initial permeability. Thus the embedding medium should have the greatest possible elasticity.

For detailed information see Data Book 2007, chapter “General – Definitions, 8.2”.

Heating up

Ferrites can run hot during operation at higher flux densities and higher frequencies.

NiZn-materials

The magnetic properties of NiZn-materials can change irreversible in high magnetic fields.

Processing notes

– The start of the winding process should be soft. Else the flanges may be destroid.
– To strong winding forces may blast the flanges or squeeze the tube that the cores can no more be mount.
– To long soldering time at high temperature (>300 °C) may effect coplanarity or pin arrangement.
– Not following the processing notes for soldering of the J-leg terminals may cause solderability problems at the transformer because of pollution with Sn oxyd of the tin bath or burned insulation of the wire. For detailed information see Data Book 2007, chapter “Processing notes, 2.2”.
– The dimensions of the hole arrangement have fixed values and should be understood as a recommendation for drilling the printed circuit board. For dimensioning the pins, the group of holes can only be seen under certain conditions, as they fit into the given hole arrangement. To avoid problems when mounting the transformer, the manufacturing tolerances for positioning the customers’ drilling process must be considered by increasing the hole diameter.

Important notes

The following applies to all products named in this publication:

1. Some parts of this publication contain **statements about the suitability of our products for certain areas of application**. These statements are based on our knowledge of typical requirements that are often placed on our products in the areas of application concerned. We nevertheless expressly point out **that such statements cannot be regarded as binding statements about the suitability of our products for a particular customer application.** As a rule, EPCOS is either unfamiliar with individual customer applications or less familiar with them than the customers themselves. For these reasons, it is always ultimately incumbent on the customer to check and decide whether an EPCOS product with the properties described in the product specification is suitable for use in a particular customer application.
2. We also point out that **in individual cases, a malfunction of passive electronic components or failure before the end of their usual service life cannot be completely ruled out in the current state of the art, even if they are operated as specified.** In customer applications requiring a very high level of operational safety and especially in customer applications in which the malfunction or failure of a passive electronic component could endanger human life or health (e.g. in accident prevention or life-saving systems), it must therefore be ensured by means of suitable design of the customer application or other action taken by the customer (e.g. installation of protective circuitry or redundancy) that no injury or damage is sustained by third parties in the event of malfunction or failure of a passive electronic component.
3. **The warnings, cautions and product-specific notes must be observed**.
4. In order to satisfy certain technical requirements, **some of the products described in this publication may contain substances subject to restrictions in certain jurisdictions (e.g. because they are classed as "hazardous")**. Useful information on this will be found in our Material Data Sheets on the Internet (www.epcos.com/material). Should you have any more detailed questions, please contact our sales offices.
5. We constantly strive to improve our products. Consequently, **the products described in this publication may change from time to time**. The same is true of the corresponding product specifications. Please check therefore to what extent product descriptions and specifications contained in this publication are still applicable before or when you place an order.

   We also **reserve the right to discontinue production and delivery of products**. Consequently, we cannot guarantee that all products named in this publication will always be available.
6. Unless otherwise agreed in individual contracts, **all orders are subject to the current version of the "General Terms of Delivery for Products and Services in the Electrical Industry" published by the German Electrical and Electronics Industry Association (ZVEI)**.
7. The trade names EPCOS, EPCOS-JONES, Baoke, Alu-X, CeraDiode, CSSP, MLSC, PhaseCap, PhaseMod, SIFI, SIFERRIT, SIKOREL, SilverCap, SIMID, SIOV, SIP5D, SIP5K, UltraCap, WindCap are **trademarks registered or pending** in Europe and in other countries. Further information will be found on the Internet at www.epcos.com/trademarks.