LEDTECH ELECTRONICS CORP.

NANYA ROAD,MUGANG ZHAOQING
CITY GUANGDONG CHINA.
TEL:86-758-2875541,2870651,2877464,2876185,2877017
FAX:86-758-2878014
Http://www.ledtech.com.tw

SPECIFICATION

PART NO. : LT03B2-43-UDC3-Z

3.0mm ROUND LED LAMP





Approved by	Checked by	Prepared by
Tung	*Yang*	*Min Bao*

Property of Ledtech Corporation. Unauthorized changes or alterations to the specification are prohibited.

Description

This blue lamp is made with InGaN chip and white diffused epoxy resin.

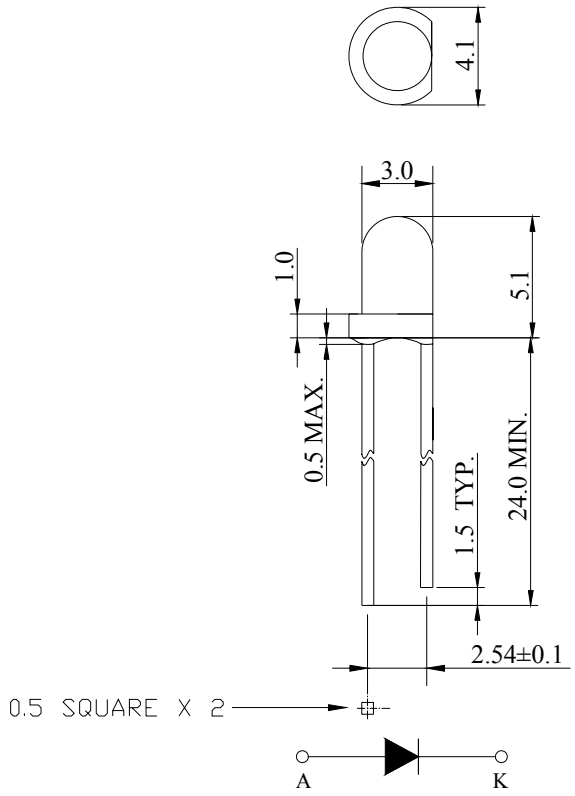

Notes:

1. All dimensions are in mm.
2. Tolerance is±0.25mm unless otherwise noted.

Description

Part No.	LED Chip		Lens Color
	Material	Emitting Color	
LT03B2-43-UDC3-Z	InGaN	Blue	White diffused

Absolute Maximum Ratings at Ta=25℃

Parameter	Symbol	Rating	Unit
Power Dissipation	PD	120	mW
Reverse Voltage	VR	5	V
D.C. Forward Current	If	30	mA
Reverse (Leakage) Current	Ir	50	μA
Peak Current(1/10Duty Cycle,0.1ms Pulse Width.)	If(Peak)	100	mA
Operating Temperature Range	Topr.	-25 to +85	℃
Storage Temperature Range	Tstg.	-40 to +100	℃
Soldering Temperature(1.6mm from body)	Tsol.	Dip Soldering : 260℃ for 5 sec. Hand Soldering : 350℃ for 3 sec.	
Electrostatic discharge	ESD.	6000	V

Electrical and Optical Characteristics:

Parameter	Symbol	Condition	Min.	Typ.	Max.	Unit
Luminous Intensity	Iv	If=20mA	140	350		mcd
Forward Voltage	Vf	If=20mA		3.2	4.0	V
Dominant Wavelength	λd	If=20mA		465		nm
Reverse (Leakage) Current	Ir	Vr=5V			50	μA
Viewing Angle	2θ1/2	If=20mA		60		deg
Spectrum Line Halfwidth	Δλ	If=20mA		26		nm

Notes: 1. The datas tested by IS tester.

2. Customer's special requirements are also welcome.

Typical Electrical / Optical Characteristics Curves :

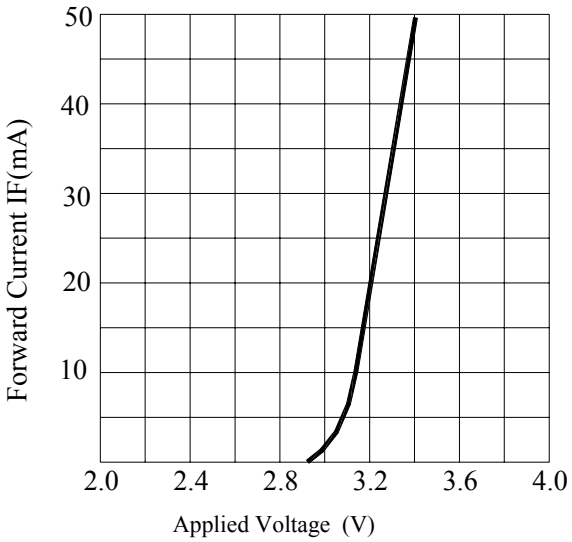

FORWARD CURRENT VS.APPLIED VOLTAGE

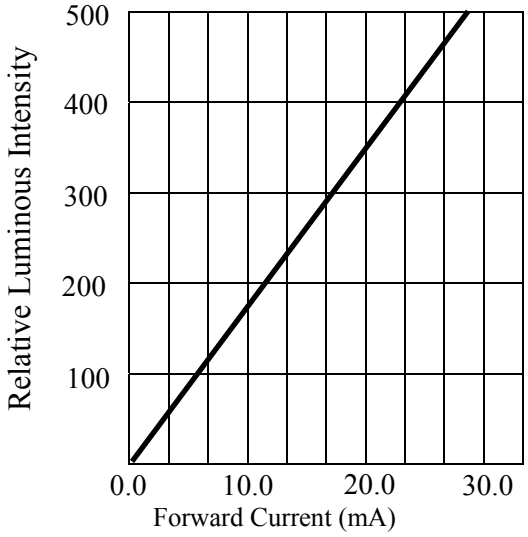

FORWARD CURRENT VS. LUMINOUS INTENSITY

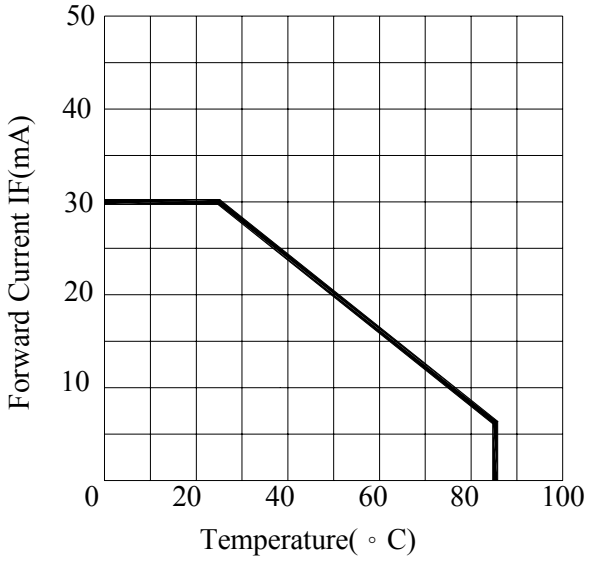

FORWARD CURRENT VS. AMBIENT TEMPERATURE

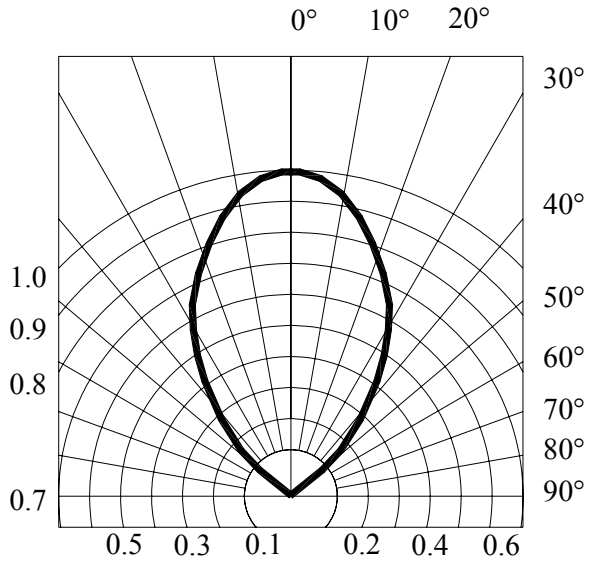

RADIATION DIAGRAM

Precautions:

TAKE NOTE OF THE FOLLOWING IN USE OF LED

1. Temperature in use

Since the light generated inside the LED needs to be emitted to outside efficiently, a resin with high light transparency is used; therefore, additives to improve the heat resistance or moisture resistance (silica gel , etc) which are used for semiconductor products such as transistors cannot be added to the resin.

Consequently, the heat resistant ability of the resin used for LED is usually low; therefore, please be careful on the following during use.

Avoid applying external force, stress, and excessive vibration to the resins and terminals at high temperature. The glass transition temperature of epoxy resin used for the LED is approximately 120-130℃.

At a temperature exceeding this limit, the coefficient of liner expansion of the resin doubles or more compared to that at normal temperature and the resin is softened.

If external force or stress is applied at that time, it may cause a wire rupture.

2. Soldering

Please be careful on the following at soldering.

After soldering, avoided applying external force, stress, and excessive vibration until the products go to cooling process (normal temperature), <Same for products with terminal leads>

(1) Soldering measurements:

Distance between melted solder side to bottom of resin shall be 1.6mm or longer.

(2) Dip soldering :

Pre-heat: 90℃ max. (Backside of PCB), Within 60 seconds.

Solder bath: 260±5℃ (Solder temperature), Within 5 seconds.

(3) Hand soldering: 350℃ max. (Temperature of soldering iron tip), Within 3 seconds.

3. Insertion

Pitch of the LED leads and pitch of mounting holes need to be same.

4. Others

Since the heat resistant ability of the LED resin is low, SMD components are used on the same PCB, please mount the LED after adhesive baking process for SMD components. In case adhesive baking is done after LED lamp insertion due to a production process reason, make sure not to apply external force, stress, and excessive vibration to the LED and follow the conditions below.

Baking temperature: 120℃ max. Baking time: Within 60 seconds.

If soldering is done sequentially after the adhesive baking, please perform the soldering after cooling down the LED to normal temperature.

ENCASED TYPE

PLASTIC PACKAGE
QUANTITY: 200 PCS

LEDTECH ELECTRONICS CORP. PART NO :LTXXXX-XX Q'TY : PCS LOT NO :XXXXXXXXX DATE : BIN CODE:

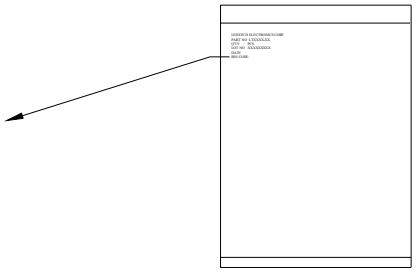

INNER BOX
QUANTITY: 40 PACKETS
TOTAL: 8,000 PCS

PART NO.	LXXXXX-XX-XX				
LOT NO.	XXXXXXXXXX				
BIN CODE	Xx X	Xx X	Xx X	Xx X	TOTAL
QUANTITY	PCS	PCS	PCS	PCS	PCS
DATE	XXXX , XX , XX				

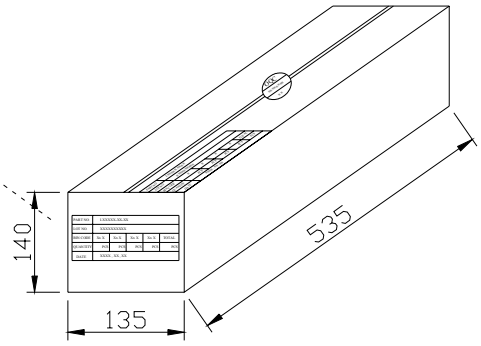

OUTER CARTON
QUANTITY: 4 BOX
TOTAL: 32,000 PCS

C/T NO. 箱 號	XX
PART NO. 料 號	LXXXXX-XX-XX
QUANTITY 數 量	PCS
N.W. 淨 重	KGS
G.W. 毛 重	KGS
REMARK 備 註	

