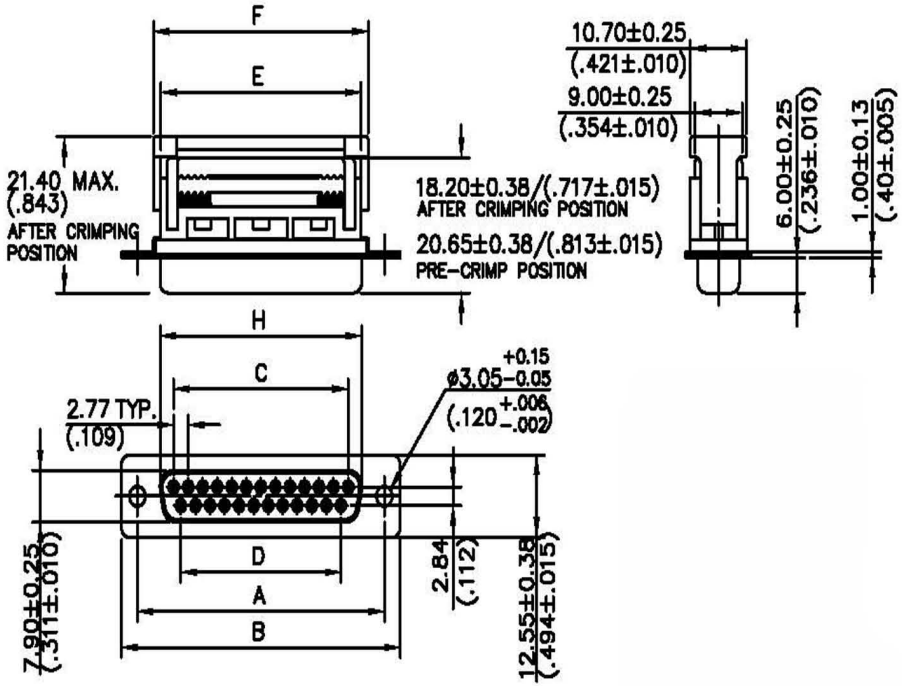

SPECIFICATION :
.CURRENT RATING : 1 AMP.
.INSULATION RESISTANCE : ≥1000 MΩ MIN. (AT 500 V DC)
.DIELECTRIC WITHSTANDING VOLTAGE : AC 500 V MIN. (FOR 1 MINUTE)
.OPERATING TEMPERATURE : −55℃ TO 105℃
.CONTACT RESISTANCE : ≤ 15mΩ
.DIELECTRIC MATERIAL : PBT WITH GLASS−FIBER REINFORCED UL 94V−0
.COLOR : BLACK , BLUE , GRAY (OPTIONAL)
.CONTACT MATERIAL : PHOSPHOR BRONZE
.CONTACT PLATING : GOLD OVER NICKEL
.WIRE SIZE : AWG 26 & 28 STRANDED , 1.27mm CONDUCTOR CENTRE FLAT CABLE

CATALOG NO.	NO. OF POSITIONS	A (±.005) ±0.13	B (±.010) ±0.25	C (±.005) ±0.13	D (±.005) ±0.13	E (±.010) ±0.25	F (±.010) ±0.25
8FSM37S	37	63.50(2.500)	69.40(2.732)	49.86/(1.963)	47.09/(1.854)	54.60/(2.150)	57.10/(2.248)
8FSM25S	25	47.04(1.852)	53.09(2.090)	33.24/(1.309)	30.47/(1.200)	38.14/(1.502)	40.90/(1.610)
8FSM15S	15	33.32(1.312)	39.10(1.539)	19.39/(.763)	16.62/(.654)	24.00/(.945)	26.60/(1.047)
8FSM09S	9	24.99/(.984)	30.80(1.212)	11.08/(.436)	8.31/(.327)	16.10/(.634)	18.60/(.732)

54.84/(2.159)	59.08/(2.326)	60.73/(2.391)
38.38/(1.511)	42.52/(1.674)	44.27/(1.743)
24.66/(.971)	28.80/(1.134)	30.53/(1.202)
16.33/(.643)	20.47/(.806)	22.20/(.874)
H ±0.25 (±.010)	I± 0.13/(.005) REAR MOUNTIONG	I± 0.13/(.005) FRONT MOUNTING

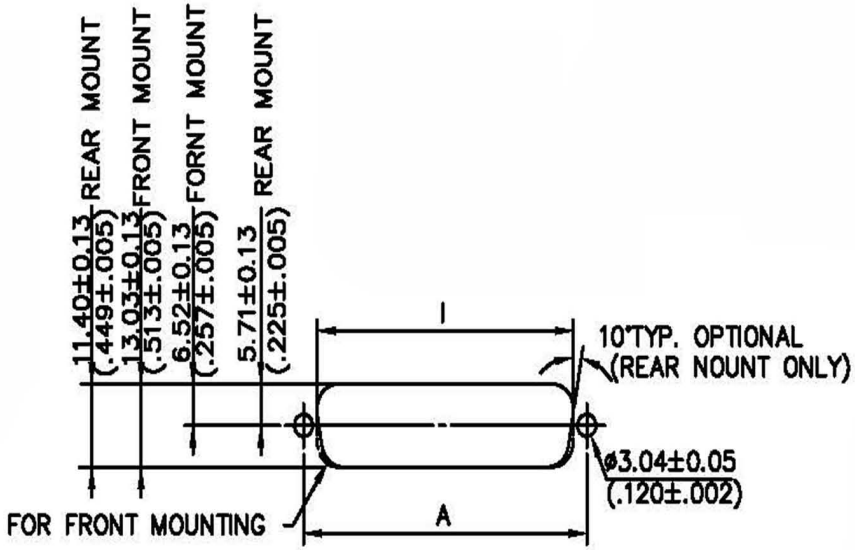

RECOMMENDED PANEL CUTOUT DIMENSIONS

RoHS Compliant

HSM 玄茂科技股份有限公司
HSUAN MAO TECHNOLOGY CO., LTD.

APPD. 核准	Ivy	TOLERANCE 容許公差 .0 ± .00 ± 0.25 ANG. ± 1°	PART NAME 品名 D-SUB IDC TYPE XXP FEMALE THROUGH HOLE METAL SHELL PLASTIC S/R SELECTIVE GOLD BLACK INSULATOR LOW LEAD
DWG. 製圖	Yumi	SCALE 比例 參考 / UNIT 單位 MM / SIZE. 紙張尺寸 A4	
DATE 制表日	2007/08/06	PAGE 張數 1 OF 1 / REV. 版次 A	PART NO. 料號 C0580-XXFCASB0R