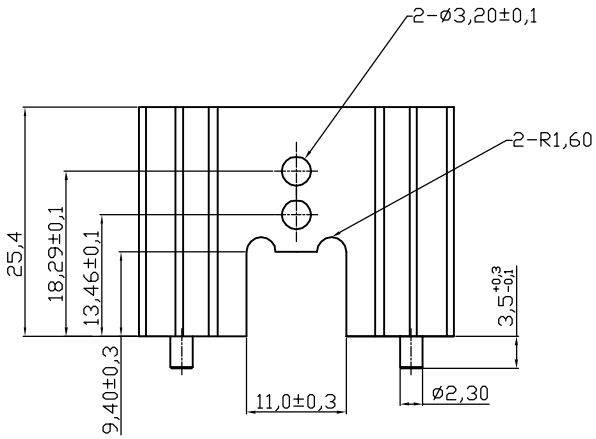

V7477W

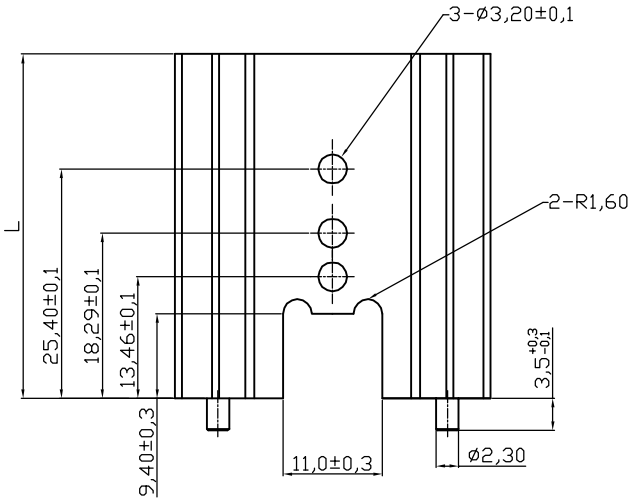

V7477X/Y/Z

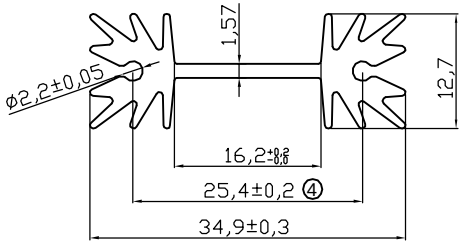

Material : AL 6063-T5
PIN: CRS Tin Plated
Finished: Black anoized
Unmarked round angle R is 5mm.

Option	L	Thermal resistance(K/W)
V7477W	25.4	14
V7477X	38.1	11
V7477Y	50.8	9
V7477Z	63.5	7

RoHS compliant
Unit: mm

Scale	FREE
TOLERANCE	
X.	±X
X.X	±X
UNIT	±0.2
DIM	Tol
X.°	±X°
X.X°	±X°
Angle	TOL

Id.	Modification	Date	Name
⑤	Change production plant	07.06.2013	Amy
④	Modify Dimention	09.05.2011	Jason
③	Modify Dimention	20.07.2010	Alex
②	Modify drawing layout	08.03.2010	Dean
①	Drawn	11.08.2009	Dean

	Date	Name
Drawn	09.05.2011	Dean
Approved	07.06.2013	Amy

ASSMANN WSW components

Customer-No.

ASSMANN WSW-No. V7477x

Drawing-No. ASS 0866 HS

rev05

Replace

Sheet