

119 series

P.C. BOARD HEADER CONNECTOR WITH LATCHES 2.54mm(0.100″)

Position	A	B	C	D	Position	A	B	C	D
10	32.00	10.16	21.84	17.96	30	57.40	35.56	47.24	43.36
12	34.54	12.70	24.38	20.50	34	62.48	40.64	52.32	48.44
14	37.08	15.24	26.92	23.04	40	70.10	48.26	59.94	56.60
16	39.62	17.78	29.46	25.58	50	82.80	60.96	72.64	68.76
20	44.70	22.86	34.54	30.66	60	95.50	73.66	85.34	81.46
26	52.32	30.48	42.16	38.28	64	100.58	78.74	90.42	86.54

[STRAIGHT]

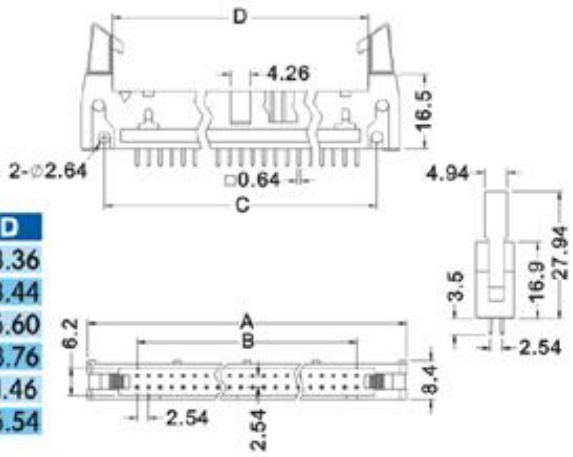

Specifications:

Contact Resistance: 30mΩmax.at DC 100mA
Insulator Resistance: 1000MΩmin.at DC 500V
Current Rating: 1AMP

Dielectric Withstanding

Voltage: AC 500V For 1 minute
Operating Temperature: -55° C- +105° C
Contact: Brass
Housing: PBT &30% Glass Fiber(UL 94V-0)

How To Order

119 -10 G S K
1 2 3 4 5

SERIES NO

NO.OF PINS:
10.12.14.16.20.26.
30.34.40.50.60.64.

COLOR:K-BLACK
G-GRAY

CONTACT PLATED:
G-ALL GOLD PLATED
T-TIN PLATED ON TERMINAL &
GOLD PLATED ON CONTACT

TERMINAL TYPE:
S-STRAIGHT TYPE
R-RIGHT ANGLE TYPE

[RIGHT ANGLE]

