EXCELLENCE OPTO. INC.

EOZ-ZAFNCD0-EG

Date	Spec. Number	Ver.
2006/4/4	TZ-038-00	A-00

Device Selection Guide

Part Number EOZ-	Total Flux Φv(mlm) @ I_F = 50mA		Luminous Intensity Iv(mcd) / Φv(mlm) @ I_F = 50mA	Viewing Angle $2\theta_{1/2}$	Dominant Wavelength λ_D(nm) @ I_F = 50mA	Forward Voltage V_F (v) @ I_F = 50 mA		I_R(μA) @ V_R = 5V
	Min.	Typ.	Typ.	Typ.	Typ.	Typ.	Max.	Max.
ZAFNCD0-EG	2750	4500	0.95	60°	525	4.0	4.6	10

BIN #	E	F	G		
Total Flux (mlm) @ I_F=50mA	2750-3850	3850-5400	5400-7600		

Package Dimensions

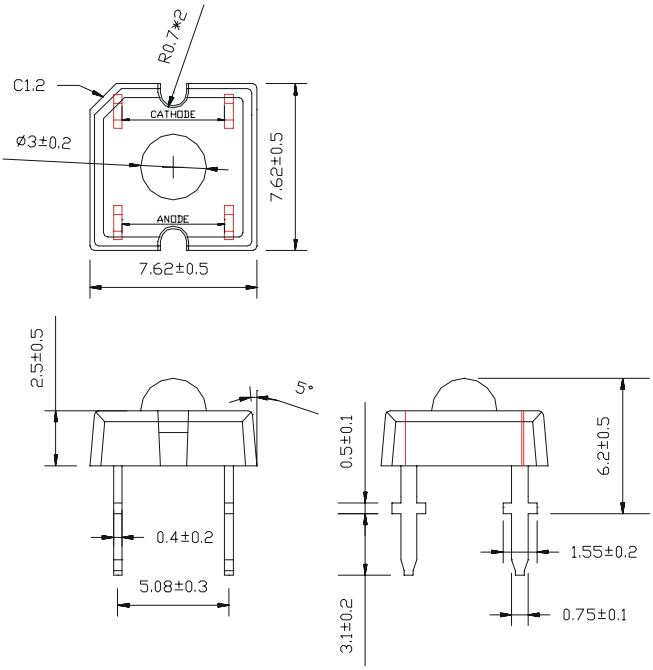

Beam Pattern

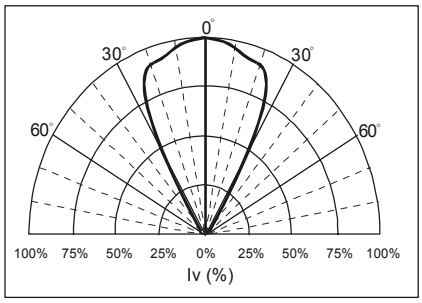

Note:

- All dimensions are in millimeter.
- Unspecified tolerance : ±0.20mm.
- Protruded resin under bottom surface of epoxy is1.5mm max.
- Lead spacing is measured where the leads emerge from the package
- Specifications are subject to be changed without notice.

Absolute Maximum Ratings at T_A = 25℃

Parameter	Symbol	Maximum Value	*USER---APPROVED*
Average Forward Current	I_F	50mA	
Peak Forward Current[a]	I_{peak}	80mA	
Reverse Voltage	V_R	5V	
Power Dissipation	P_D	230mW	
Operating Temperature Range	T_{OPR}	-40℃ ~ + 85℃	
Storage Temperature Range	T_{STO}	-40℃ ~ + 100℃	
Lead Soldering Temperature	T_{SOL}	260℃ / 5 seconds	

Notes: [a] Duty Ratio = 1/10, Pulse Width = 0.1ms.

Headquarters
5F, No. 1, Creation Road II, Hsinchu Science Park,
Hsinchu, Taiwan 300, R.O.C.
Tel : 886-3-5679000 Fax : 886-3-5679999
http://www.eoi.com.tw E-mail : Service@eoi.com.tw

U.S. Office
1400 W. Lambert Road, Suite B,
Brea, CA92821, U.S.A
Tel : 1-562-694-1246 Fax : 1-562-691-3087
http://www.eoi-us.com E-mail : Sales@eoius.com