ZL50012

Flexible 512-ch Digital Switch

Data Sheet

Features

April 2006

- 512 channel x 512 channel non-blocking switch at 2.048 Mb/s, 4.096 Mb/s or 8.192 Mb/s operation
- Rate conversion between the ST-BUS inputs and ST-BUS outputs
- Per-stream ST-BUS input with data rate selection of 2.048 Mb/s, 4.096 Mb/s or 8.192 Mb/s
- Per-stream ST-BUS output with data rate selection of 2.048 Mb/s, 4.096 Mb/s or 8.192 Mb/s; the output data rate can be different than the input data rate
- Per-stream high impedance control output for every ST-BUS output with fractional bit advancement
- Per-stream input channel and input bit delay programming with fractional bit delay
- Per-stream output channel and output bit delay programming with fractional bit advancement
- Multiple frame pulse outputs and reference clock outputs
- Per-channel constant throughput delay

Ordering Information

ZL50012/QCC	160 Pin LQFP	Trays
ZL50012/GDC	144 Ball LBGA	Trays
ZL50012QCG1	160 Ball LQFP*	Trays, Bake & Drypack
ZL50012GDG2	144 Ball LBGA**	Trays, Bake & Drypack

*Pb Free Matte Tin
**Pb Free Tin/Silver/Copper

-40°C to +85°C

- Per-channel high impedance output control
- Per-channel message mode
- Per-channel pseudo random bit sequence (PRBS) pattern generation and bit error detection
- Control interface compatible to Motorola non-multiplexed CPUs
- Connection memory block programming capability
- IEEE-1149.1 (JTAG) test port
- 3.3V I/O with 5 V tolerant input

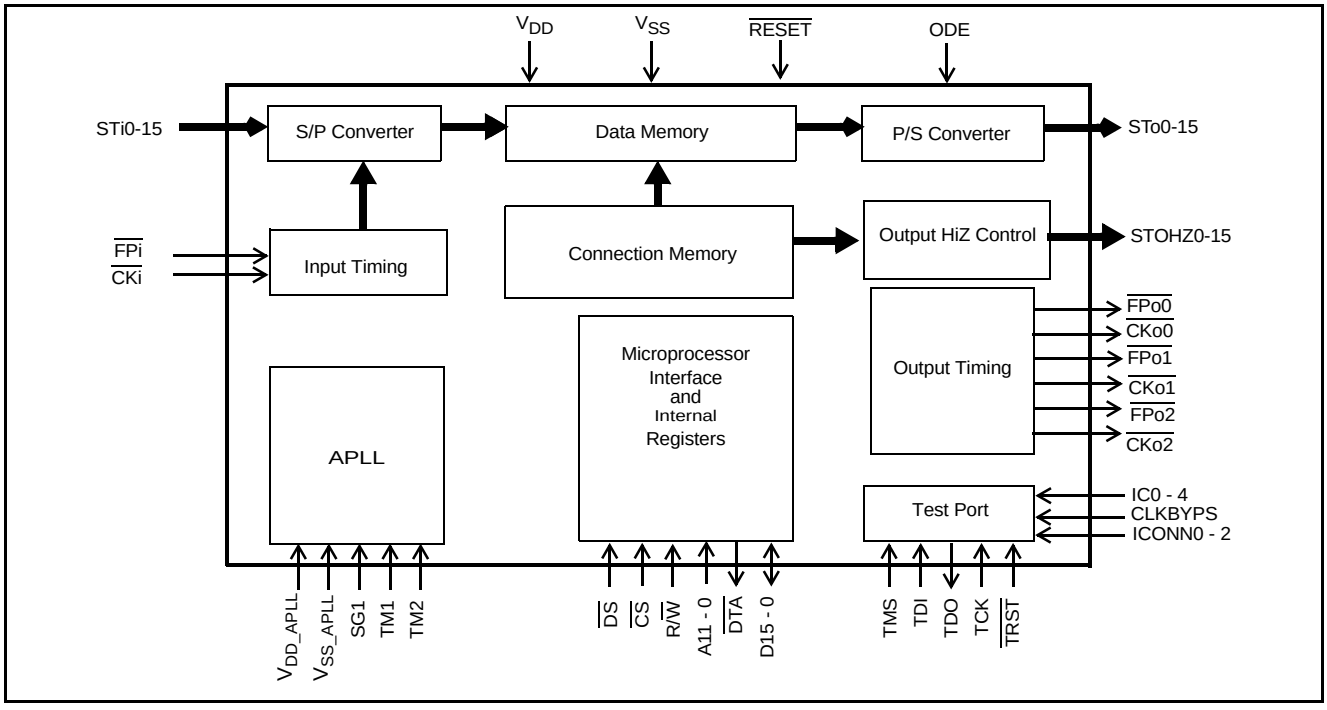

Figure 1 - ZL50012 Functional Block Diagram

Zarlink Semiconductor Inc.
Zarlink, ZL and the Zarlink Semiconductor logo are trademarks of Zarlink Semiconductor Inc.
Copyright 2002-2006, Zarlink Semiconductor Inc. All Rights Reserved.

Applications

- Small and medium digital switching platforms
- Access Servers
- Time Division Multiplexers
- Computer Telephony Integration
- Digital Loop Carriers

Description

The device has sixteen ST-BUS inputs (STi0-15) and sixteen ST-BUS outputs (STo0-15). It is a non-blocking digital switch with 512 64 kb/s channels and performs rate conversion between the ST-BUS inputs and ST-BUS outputs. The ST-BUS inputs accept serial input data streams with the data rate of 2.048 Mb/s, 4.096 Mb/s or 8.192 Mb/s on a per-stream basis. The ST-BUS outputs deliver serial output data streams with the data rate of 2.048 Mb/s, 4.096 Mb/s or 8.192 Mb/s on a per-stream basis. The device also provides sixteen high impedance control outputs (STOHZ 0-15) to support the use of external high impedance control buffers.

The ZL50012 has features that are programmable on per-stream or per-channel basis including message mode, input bit delay, output bit advancement, constant throughput delay and high impedance output control.

Table of Contents

Features 1
Applications 2
Description 2
Changes Summary 9
1.0 Device Overview 16
2.0 Functional Description 16
2.1 ST-BUS Input Data Rate and Input Timing 16
2.1.1 ST-BUS Input Operation Mode 16
2.1.2 Frame Pulse Input and Clock Input timing 16
2.1.3 ST-BUS Input Timing 18
2.1.4 Improved Input Jitter Tolerance with Frame Boundary Determinator 18
2.2 ST-Bus Output Data Rate and Output Timing 19
2.2.1 ST-Bus Output Operation Mode. 19
2.2.2 Frame Pulse Output and Clock Output Timing 19
2.2.3 ST-BUS Output Timing 22
2.3 Serial Data Input Delay and Serial Data Output Offset 23
2.3.1 Input Channel Delay Programming 23
2.3.2 Input Bit Delay Programming 23
2.3.3 Fractional Input Bit Delay Programming 24
2.3.4 Output Channel Delay Programming 24
2.3.5 Output Bit Delay Programming 25
2.3.6 Fractional Output Bit Advancement Programming. 25
2.3.7 External High Impedance Control, STOHZ 0 to 15 26
2.4 Data Delay Through The Switching Paths. 27
2.5.1 Connection Memory Block Programming. 30
2.6 Bit Error Rate (BER) Test 31
2.7 Quadrant frame programming 32
2.8 Microprocessor Port 33
3.0 Device Reset and Initialization 33
4.0 JTAG Support. 33
4.1 Test Access Port (TAP) 33
4.2 Instruction Register 34
4.3 Test Data Register. 34
4.4 BSDL 34
5.0 Register Address Mapping 35
6.0 Detail Register Description 37

List of Figures

Figure 1 - ZL50012 Functional Block Diagram . . . 1
Figure 2 - 24 mm x 24 mm LQFP (JEDEC MS-026) Pinout Diagram . . . 10
Figure 3 - 13 mm x 13 mm 144 Ball LBGA Pinout Diagram. . . . 11
Figure 4 - Input Timing when (CKIN2 to CKIN0 bits = 010) in the Control Register . . . 17
Figure 5 - Input Timing when (CKIN2 to CKIN0 bits = 001) in the Control Register . . . 17
Figure 6 - Input Timing when (CKIN2 to CKIN0 bits = 000) in the Control Register . . . 17
Figure 7 - ST-BUS Input Timing for Various Input Data Rates. . . . 18
Figure 8 - FPo0 and CKo0 Output Timing when the CKFP0 bit = 0. . . . 20
Figure 9 - FPo0 and CKo0 Output Timing when the CKFP0 bit = 1. . . . 20
Figure 10 - FPo1 and CKo1 Output Timing when the CKFP1 bit = 0. . . . 20
Figure 11 - FPo1 and CKo1 Output Timing when the CKFP1 bit = 1. . . . 21
Figure 12 - FPo2 and CKo2 Output Timing when the CKFP2 bit = 0. . . . 21
Figure 13 - FPo2 and CKo2 Output Timing when the CKFP2 bit = 1. . . . 21
Figure 14 - ST-BUS Output Timing for Various Output Data Rates . . . 22
Figure 15 - Input Channel Delay Timing Diagram . . . 23
Figure 16 - Input Bit Delay Timing Diagram. . . . 24
Figure 17 - Output Channel Delay Timing Diagram. . . . 24
Figure 18 - Output Bit Delay Timing Diagram . . . 25
Figure 19 - Fractional Output Bit Advancement Timing Diagram. . . . 25
Figure 20 - Example: External High Impedance Control Timing . . . 26
Figure 21 - Data Throughput Delay when input and output channel delay are disabled for Input Ch0 switched to Output Ch0 . . . 28
Figure 22 - Data Throughput Delay when input channel delay is enabled and output channel delay is disabled for Input Ch0 switched to Output Ch0 . . . 28
Figure 23 - Data Throughput Delay when input channel delay is disabled and output channel delay is enabled for Input Ch0 switch to Output Ch0 . . . 28
Figure 24 - Data Throughput Delay when input and output channel delay are enabled for Input Ch0 switched to Output Ch0 . . . 29
Figure 25 - Frame Pulse Input and Clock Input Timing Diagram. . . . 56
Figure 26 - Frame Boundary Timing with Input Clock (cycle-to-cycle) Variation . . . 56
Figure 27 - Frame Boundary Timing with Input Frame Pulse (cycle-to-cycle) Variation . . . 57
Figure 28 - Input and Output Frame Boundary Offset . . . 58
Figure 29 - FPo0 and CKo0 Timing Diagram. . . . 59
Figure 30 - FPo1 and CKo1 Timing Diagram. . . . 60
Figure 31 - FPo2 and CKo2 Timing Diagram. . . . 61
Figure 32 - ST-BUS Inputs (STi0 - 15) Timing Diagram. . . . 62
Figure 33 - ST-BUS Outputs (STo0 - 15) Timing Diagram. . . . 63
Figure 34 - Serial Output and External Control . . . 64
Figure 35 - Output Driver Enable (ODE) . . . 64
Figure 36 - Motorola Non-Multiplexed Bus Timing. . . . 65
Figure 37 - JTAG Test Port Timing Diagram . . . 66
Figure 38 - Reset Pin Timing Diagram. . . . 66

List of Tables

Table 1 - FPi and CKi Input Programming . . . 16
Table 2 - FPo0 and CKo0 Output Programming . . . 19
Table 3 - FPo1 and CKo1 Output Programming . . . 19
Table 4 - FPo2 and CKo2 Output Programming . . . 19
Table 5 - Variable Range for Input Streams . . . 27
Table 6 - Variable Range for Output Streams. . . . 27
Table 7 - Data Throughput Delay . . . 27
Table 8 - Connection Memory in Block Programming Mode . . . 30
Table 9 - Definition of the Four Quadrant Frames . . . 32
Table 10 - Quadrant Frame 0 LSB Replacement. . . . 32
Table 11 - Quadrant Frame 1 LSB Replacement . . . 32
Table 12 - Quadrant Frame 2 LSB Replacement. . . . 32
Table 13 - Quadrant Frame 3 LSB Replacement. . . . 32
Table 14 - Address Map for Device Specific Registers . . . 35
Table 15 - Control Register (CR) Bits. . . . 37
Table 16 - Internal Mode Selection (IMS) Register Bits . . . 39
Table 17 - BER Start Receiving Register (BSRR) Bits . . . 40
Table 18 - BER Length Register (BLR) Bits . . . 41
Table 19 - BER Count Register (BCR) Bits . . . 41
Table 20 - Stream Input Control Register 0 to 7 (SICR0 to SICR7) . . . 42
Table 21 - Stream Input Control Register 8 to 15 (SICR8 to SICR15) . . . 44
Table 22 - Stream Input Delay Register 0 to 7 (SIDR0 to SIDR7) . . . 46
Table 23 - Stream Input Delay Register 8 to 15 (SIDR8 to SIDR15) . . . 47
Table 24 - Stream Output Control Register 0 to 7 (SOCR0 to SOCR7). . . . 48
Table 25 - Stream Output Control Register 8 to 15 (SOCR8 to SOCR15). . . . 49
Table 26 - Stream Output Offset Register 0 to 7 (SOOR0 to SOOR7). . . . 50
Table 27 - Stream Output Offset Register 8 to 15 (SOOR8 to SOOR15). . . . 51
Table 28 - Address Map for Memory Locations (512 x 512 DX, MSB of address = 1). . . . 52
Table 29 - Connection Memory Bit Assignment when the CMM bit = 0 . . . 53
Table 30 - Connection Memory Bits Assignment when the CMM bit = 1 . . . 53

Changes Summary

The following table captures the changes from the July 2004 issue.

Page	Item	Change
18	2.1.4, “Improved Input Jitter Tolerance with Frame Boundary Determinator“	• Added a new section to describe the improved input jitter tolerance with the frame boundary determinator.
37	Table 15 -, “Control Register (CR) Bits“ - bits , “FBDMODE“ and , “FBDEN“	• Renamed bit 15 from Unused to FBDMODE and added description to clarify the frame boundary determinator operation. • Clarified FBDEN description.

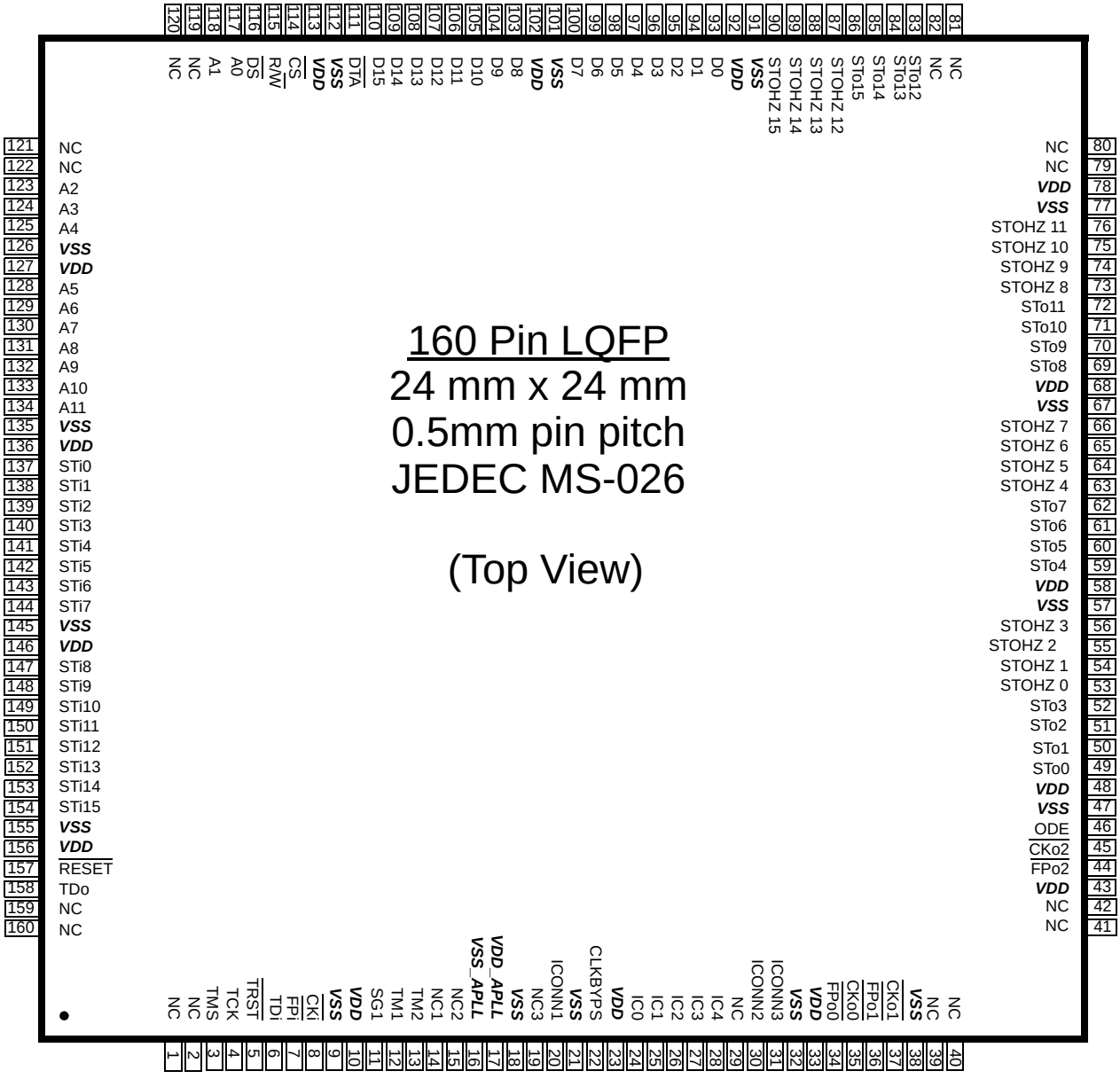

Figure 2 - 24 mm x 24 mm LQFP (JEDEC MS-026) Pinout Diagram

PINOUT DIAGRAM: (as viewed through top of package)

A1 corner identified by metallized marking, mould indent, ink dot or right-angled corner

	1	2	3	4	5	6	7	8	9	10	11	12
A	ODE	$\overline{FPo2}$	$\overline{FPo0}$	ICONN 3	IC1	IC0	ICONN 1	NC3	TM1	$\overline{CKi}$	TDi	TCK
B	$\overline{CKo2}$	$\overline{CKo1}$	$\overline{FPo1}$	$\overline{CKo0}$	IC3	IC2	CLK BYPS	VDD_ APLL	SG1	$\overline{FPi}$	$\overline{TRST}$	TMS
C	STo2	STo1	STOHZ 0	ICONN 2	NC	NC	IC4	NC2	NC1	TM2	TDo	STi15
D	STo3	STo0	STOHZ 1	VSS	VDD	VDD	VDD	VSS_ APLL	VSS	STi8	$\overline{RESET}$	STi14
E	STo5	STo4	STOHZ 3	STOHZ 2	VSS	VSS	VSS	VSS	VDD	STi9	STi13	STi12
F	STo6	STo7	STOHZ 4	VDD	VSS	VSS	VSS	VSS	VDD	STi7	STi10	STi11
G	STOHZ 6	STOHZ 7	STOHZ 5	VDD	VSS	VSS	VSS	VSS	STi1	STi6	STi5	STi4
H	STo9	STo10	STo8	VDD	VSS	VSS	VSS	VSS	STi0	$\overline{DS}$	STi2	STi3
J	STo11	STOHZ 11	STOHZ 8	VSS	D2	VDD	VDD	VDD	A10	A9	A8	A11
K	STOHZ 9	STOHZ 15	STo15	STOHZ 13	D1	D5	$\overline{CS}$	D10	D11	A5	A4	A7
L	STOHZ 10	STo12	STo13	D3	D15	D4	D7	D12	D14	A2	A3	A6
M	STo14	STOHZ 12	STOHZ 14	D0	$\overline{DTA}$	D6	D8	D9	D13	A0	A1	R/$\overline{W}$

Figure 3 - 13 mm x 13 mm 144 Ball LBGA Pinout Diagram

Pin Description

LQFP Pin Number	LBGA Ball Number	Name	Description
10, 23, 33, 43, 48, 58, 68, 78, 92, 102, 113, 127, 136, 146, 156	D5, D6, D7 E9 F4, F9 G4 H4 J6, J7, J8	V_{DD}	**Power Supply for the device:** +3.3 V
9, 18, 21, 32, 38, 47, 57, 67, 77, 91, 101, 112, 126, 135, 145, 155	D4, D9 E5, E6, E7, E8 F5, F6, F7, F8 G5, G6, G7, G8 H5, H6, H7, H8 J4	V_{SS} (GND)	**Ground.**
3	B12	TMS	**Test Mode Select (3.3 V Tolerant Input with internal pull-up):** JTAG signal that controls the state transitions of the TAP controller. This pin is pulled high by an internal pull-up resistor when it is not driven.
4	A12	TCK	**Test Clock (5 V Tolerant Input):** Provides the clock to the JTAG test logic.
5	B11	$\overline{TRST}$	**Test Reset (3.3 V Tolerant Input with internal pull-up):** Asynchronously initializes the JTAG TAP controller by putting it in the Test-Logic-Reset state. This pin should be pulsed low during power-up to ensure that the device is in the normal functional mode. When JTAG is not being used, this pin should be pulled low during normal operation.
6	A11	TDi	**Test Serial Data In (3.3 V Tolerant Input with internal pull-up):** JTAG serial test instructions and data are shifted in on this pin. This pin is pulled high by an internal pull-up resistor when it is not driven.
7	B10	$\overline{FPi}$	**ST-BUS Frame Pulse Input (5 V Tolerant Input):** This pin accepts the frame pulse which stays low for 61 ns, 122 ns or 244 ns at the frame boundary. The frame pulse associating with the highest input data rate has to be applied to this pin. The frame pulse frequency is 8 kHz. The device also accepts positive frame pulse if the FPINP bit is high in the Internal Mode Selection register.
8	A10	$\overline{CKi}$	**ST-BUS Clock Input (5 V Tolerant Input):** This pin accepts a 4.096 MHz, 8.192 MHz or 16.384 MHz clock. The input clock frequency has to be equal to or greater than twice of the highest input data rate. The clock falling edge defines the input frame boundary. The device also allows the clock rising edge to define the frame boundary by programming the CKINP bit in the Internal Mode Selection register.

Pin Description (continued)

LQFP Pin Number	LBGA Ball Number	Name	Description
11	B9	SG1	**APLL Test Control (3.3 V Input with internal pull-down):** For normal operation, this input MUST be low.
12	A9	TM1	**APLL Test Pin 1:** For normal operation, this input MUST be low.
13	C10	TM2	**APLL Test Pin 2:** For normal operation, this input MUST be low.
14, 15, 19	C9, C8, A8	NC1, NC2, NC3	**No Connection:** These pins MUST be left unconnected.
16	D8	V_{SS_APLL}	**Ground for the APLL Circuit.**
17	B8	V_{DD_APLL}	**Power Supply for the on-chip Analog Phase Lock Loop (APLL) Circuit:** +3.3 V
20	A7	ICONN1	**Internal Connection:** In normal mode, this pin must be low.
22	B7	CLKBYPS	**Test Clock Input:** For device testing only, in normal operation, this input MUST be low.
24 - 28	A6, A5, B6, B5, C7	IC0 - 4	**Internal connection (3.3 V Tolerant Inputs with internal pull-down):** In normal mode, these pins must be low.
30, 31	C4, A4	ICONN2 - 3	**Internal Connection:** In normal mode, these pins must be low.
34	A3	$\overline{FPo0}$	**ST-BUS Frame Pulse Output 0 (5 V Tolerance Three-state Output):** ST-BUS frame pulse output which stays low for 244 ns or 122 ns at the output frame boundary. Its frequency is 8 KHz. The polarity of this signal can be changed using the Internal Mode Selection register.
35	B4	$\overline{CKo0}$	**ST-BUS Clock Output 0 (5 V Tolerant Three-state Output):** A 4.094 MHz or 8.192 MHz clock output. The clock falling edge defines the output frame boundary. The polarity of this signal can be changed using the Internal Mode Selection register.
36	B3	$\overline{FPo1}$	**ST-BUS Frame Pulse Output 1 (5 V Tolerant Three-state Output):** ST-BUS frame pulse output which stays low for 61 ns or 122 ns at the output frame boundary. Its frequency is 8 KHz. The polarity of this signal can be changed using the Internal Mode Selection register.
37	B2	$\overline{CKo1}$	**ST-BUS Clock Output 1 (5 V Tolerant Three-state Output):** A 16.384 MHz or 8.192 MHz clock output. The clock falling edge defines the output frame boundary. The polarity of this signal can be changed using the Internal Mode Selection register.

Pin Description (continued)

LQFP Pin Number	LBGA Ball Number	Name	Description
44	A2	$\overline{\text{FPo2}}$	**ST-BUS Frame Pulse Output 2 (5V Tolerant High Speed Three-state Output):** ST-BUS frame pulse output which stays low for 30 ns or 61 ns at the frame boundary. Its frequency is 8 KHz. The polarity of this signal can be changed using the Internal Mode Selection register.
45	B1	$\overline{\text{CKo2}}$	**ST-BUS Clock Output 2 (5 V Tolerant High Speed Three-state Output):** A 32.768 MHz or 16.384 MHz clock output. The clock falling edge defines the output frame boundary. The polarity of this signal can be changed using the Internal Mode Selection register.
46	A1	ODE	**Output Drive Enable (5 V Tolerant Input):** This is the asynchronously output enable control for the STo0 - 15 and the output driven high control for the STOHZ 0 - 15 serial outputs. When it is high, the STo0 - 15 and STOHZ 0 - 15 are enabled. When it is low, the STo0 - 15 are in the high impedance state and the STOHZ 0 - 15 are driven high.
49 - 52 59 - 62 69 - 72 83 - 86	D2, C2, C1, D1 E2, E1, F1, F2 H3, H1, H2, J1 L2, L3, M1, K3	STo0 - 3 STo4 - 7 STo8 - 11 STo12 - 15	**Serial Output Streams 0 to 15 (5 V Tolerant Three-state Outputs):** The data rate of these output streams can be selected independently using the stream control output registers. In the 2.048 Mb/s mode, these pins have serial TDM data streams at 2.048 Mb/s with 32 channels per stream. In the 4.096 Mb/s mode, these pins have serial TDM data streams at 4.096 Mb/s with 64 channels per stream. In the 8.192 Mb/s mode, these pins have serial TDM data streams at 8.192 Mb/s with 128 channels per stream.
53 - 56 63 - 66 73 - 76 87 - 90	C3, D3, E4, E3 F3, G3, G1, G2 J3, K1, L1, J2 M2, K4, M3, K2	STOHZ 0 - 3 STOHZ 4 - 7 STOHZ 8 - 11 STOHZ 12 - 15	**Serial Output Streams High Impedance Control 0 to 15 (5 V Tolerant Three-state Outputs):** These pins are used to enable (or disable) external three-state buffers. When a output channel is in the high impedance state, the STOHZ drives high for the duration of the corresponding output channel. When the STo channel is active, the STOHZ drives low for the duration of the corresponding output channel.
93 - 96 97 - 100 103 - 106 107 - 110	M4, K5, J5, L4 L6, K6, M6, L7 M7, M8, K8, K9 L8, M9, L9, L5	D0 - D3 D4 - D7 D8 - D11 D12 - D15	**Data Bus 0 - 15 (5 V Tolerant I/Os):** These pins form the 16-bit data bus of the microprocessor port.
111	M5	$\overline{\text{DTA}}$	**Data Transfer Acknowledgment (5 V Tolerant Three-state Output):** This active low output indicates that a data bus transfer is complete. A pull-up resistor is required to hold this pin at HIGH level.
114	K7	$\overline{\text{CS}}$	**Chip Select (5 V Tolerant Input):** Active low input used by the microprocessor to enable the microprocessor port access.

Pin Description (continued)

LQFP Pin Number	LBGA Ball Number	Name	Description
115	M12	R/$\overline{W}$	**Read/Write (5 V Tolerant Input):** This input controls the direction of the data bus lines (D0-D15) during a microprocessor access.
116	H10	DS	**Data Strobe (5 V Tolerant Input):** This active low input works in conjunction with $\overline{CS}$ to enable the microprocessor port read and write operations.
117, 118 123 - 125 128 - 130 131 - 134	M10, M11 L10, L11, K11 K10, L12, K12 J11, J10, J9, J12	A0 - A1 A2 - A4 A5 - A7 A8 - A11	**Address 0 - 11 (5 V Tolerant Inputs):** These pins form the 12-bit address bus to the internal memories and registers.
137 - 139 140 - 142 143, 144 147 - 149 150 - 152 153, 154	H9, G9, H11 H12, G12, G11 G10, F10 D10, E10, F11 F12, E12, E11 D12, C12	STi0 - 2 STi3 - 5 STi6 - 7 STi8 - 10 STi11- 13 STi14 - 15	**Serial Input Streams 0 to 15 (5 V Tolerant Inputs):** The data rate of these input streams can be selected independently using the stream input control registers. In the 2.048 Mb/s mode, these pins accept serial TDM data streams at 2.048 Mb/s with 32 channels per stream. In the 4.096 Mb/s mode, these pins accept serial TDM data streams at 4.096 Mb/s with 64 channels per stream. In the 8.192 Mb/s mode, these pins accept serial TDM data streams at 8.192 Mb/s with 128 channels per stream. Unused serial input pins are required to connect to either Vdd or ground, through an external pull-up resistors or external pull-down resistor.
157	D11	$\overline{RESET}$	**Device Reset (5 V Tolerant Input):** This input (active LOW) puts the device in its reset state that disables the STo0 - 15 drivers and drives the STOHZ 0 - 15 outputs to high. It also clears the device registers and internal counters. To ensure proper reset action, the reset pin must be low for longer than 1 ms. Upon releasing the reset signal to the device, the first microprocessor access can take place after 600 µs due to the time required to stabilize the APLL block from the power down state.
158	C11	TDo	**Test Serial Data Out (3 V Tolerant Three-state Output):** JTAG serial data is output on this pin on the falling edge of TCK. This pin is held in high impedance state when JTAG is not enabled.
1, 2, 29, 39 - 42, 79 - 82, 119 - 122, 159, 160	C5, C6	NC	**No Connection Pins.** These pins are not connected to the device internally.

1.0 Device Overview

The device uses the ST-BUS input frame pulse and the ST-BUS input clock to define the input frame boundary and timing for the ST-BUS input streams with various data rates (2.048 Mb/s, 4.096 Mb/s and/or 8.192 Mb/s). The output frame boundary is defined by the output frame pulses and the output clock timing for the ST-BUS output streams with various data rates (2.048 Mb/s, 4.096 Mb/s and/or 8.192 Mb/s).

By using Zarlink's message mode capability, microprocessor data can be broadcast to the data output streams on a per channel basis. This feature is useful for transferring control and status information for external circuits or other ST-BUS devices.

A non-multiplexed microprocessor port allows users to program the device with various operating modes and switching configurations. Users can use the microprocessor port to perform register read/write, connection memory read/write and data memory read operations. The microprocessor port has a 12-bit address bus, a 16-bit data bus and four control signals.

The device also supports the mandatory requirements of the IEEE-1149.1 (JTAG) standard via the test port.

2.0 Functional Description

A functional block diagram of the ZL50012 is shown in Figure 1 on page 1.

2.1 ST-BUS Input Data Rate and Input Timing

The device has sixteen ST-BUS serial data inputs. Any of the sixteen inputs can be programmed to accept different data rates, 2.048 Mb/s, 4.096 Mb/s or 8.192 Mb/s.

2.1.1 ST-BUS Input Operation Mode

Any ST-BUS input can be programmed to accept the 2.048 Mb/s, 4.096 Mb/s or 8.192 Mb/s data using Bit 0 to 2 in the stream input control registers, SICR0 to SICR15 as shown in Table 20 on page 42 and Table 21 on page 44.

The maximum number of input channels is 512 channels. External pull-up or pull-down resistors are required for any unused ST-BUS inputs.

2.1.2 Frame Pulse Input and Clock Input timing

The frame pulse input $\overline{FPi}$ accepts the frame pulse used for the **highest** input data rate. The frame pulse is an 8 kHz input signal which stays low for 244 ns, 122 ns or 61 ns for the input data rate of 2.048 Mb/s, 4.096 Mb/s or 8.192 Mb/s respectively. The frequency of $\overline{CKi}$ must be twice the highest data rate. For example, if users present the ZL50012 with 2.048 Mb/s and 8.192 Mb/s input data, the device should be programmed to accept the input clock of 16.384 MHz and the frame pulse which stays low for 61 ns.

Users have to program the CKIN2 - 0 bits in the Control Register (CR), for the width of the frame pulse low cycle and the frequency of the input clock. See Table 1 for the programming of the CKIN0, CKIN1 and CKIN2 bits in the Control Register.

CKIN2 - 0 bits	$\overline{FPi}$ Low Cycle	$\overline{CKi}$	Highest Input Data Rate
000	61 ns	16.384 MHz	8.192 Mb/s
001	122 ns	8.192 MHz	4.096 Mb/s
010	244 ns	4.096 MHz	2.048 Mb/s
011 - 111	Reserved		

Table 1 - $\overline{FPi}$ and $\overline{CKi}$ Input Programming

The device also accepts positive or negative input frame pulse and ST-BUS input clock formats via the programming of the FPINP and CKINP bits in the Internal Mode Selection (IMS) register. By default, the device accepts the negative input clock format.

Figure 4, Figure 5 and Figure 6 describe the usage of CKIN2 - 0, FPINP and CKINP in the Internal Mode Selection (IMS) register:

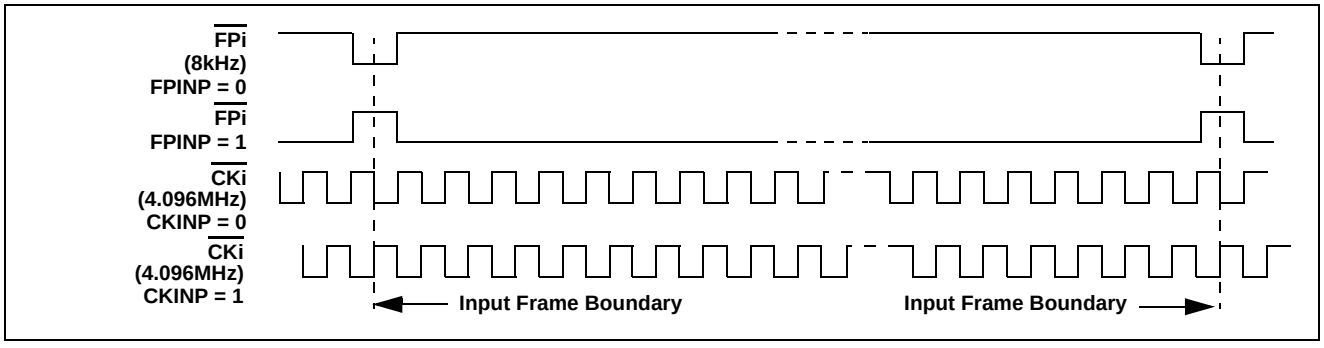

Figure 4 - Input Timing when (CKIN2 to CKIN0 bits = 010) in the Control Register

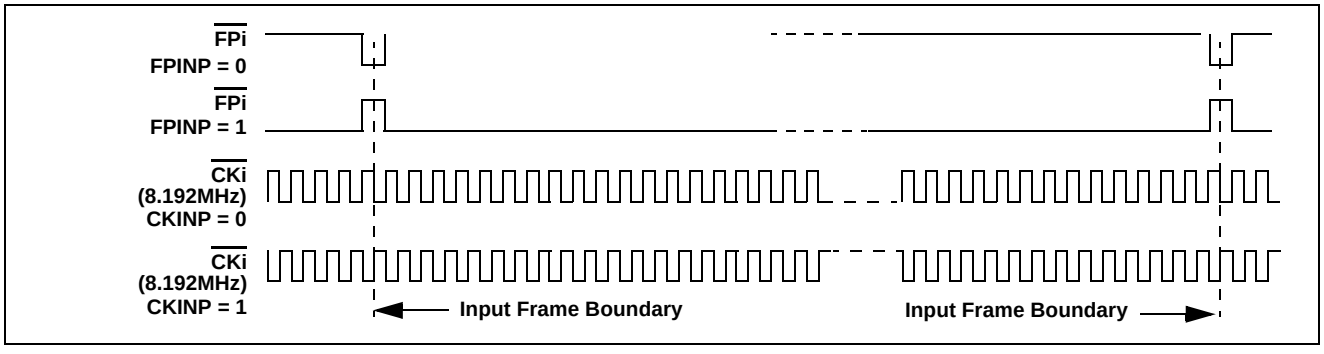

Figure 5 - Input Timing when (CKIN2 to CKIN0 bits = 001) in the Control Register

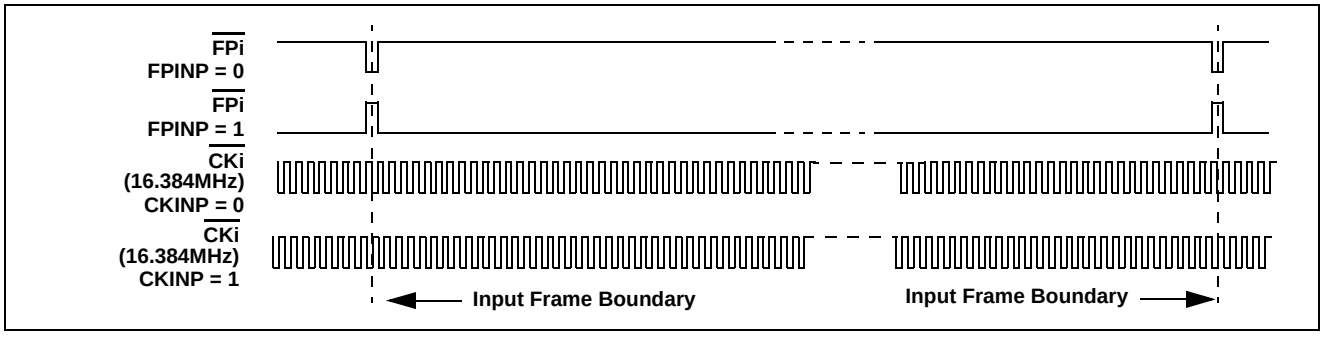

Figure 6 - Input Timing when (CKIN2 to CKIN0 bits = 000) in the Control Register

2.1.3 ST-BUS Input Timing

When the negative input frame pulse and negative input clock formats are used, the input frame boundary is defined by the falling edge of the $\overline{CKi}$ input clock while the $\overline{FPi}$ is low. When the input data rate is 2.048 Mb/s, 4.096 Mb/s or 8.192 Mb/s, there are 32, 64 or 128 channels per every ST-BUS frame respectively. Figure 7 shows the details:

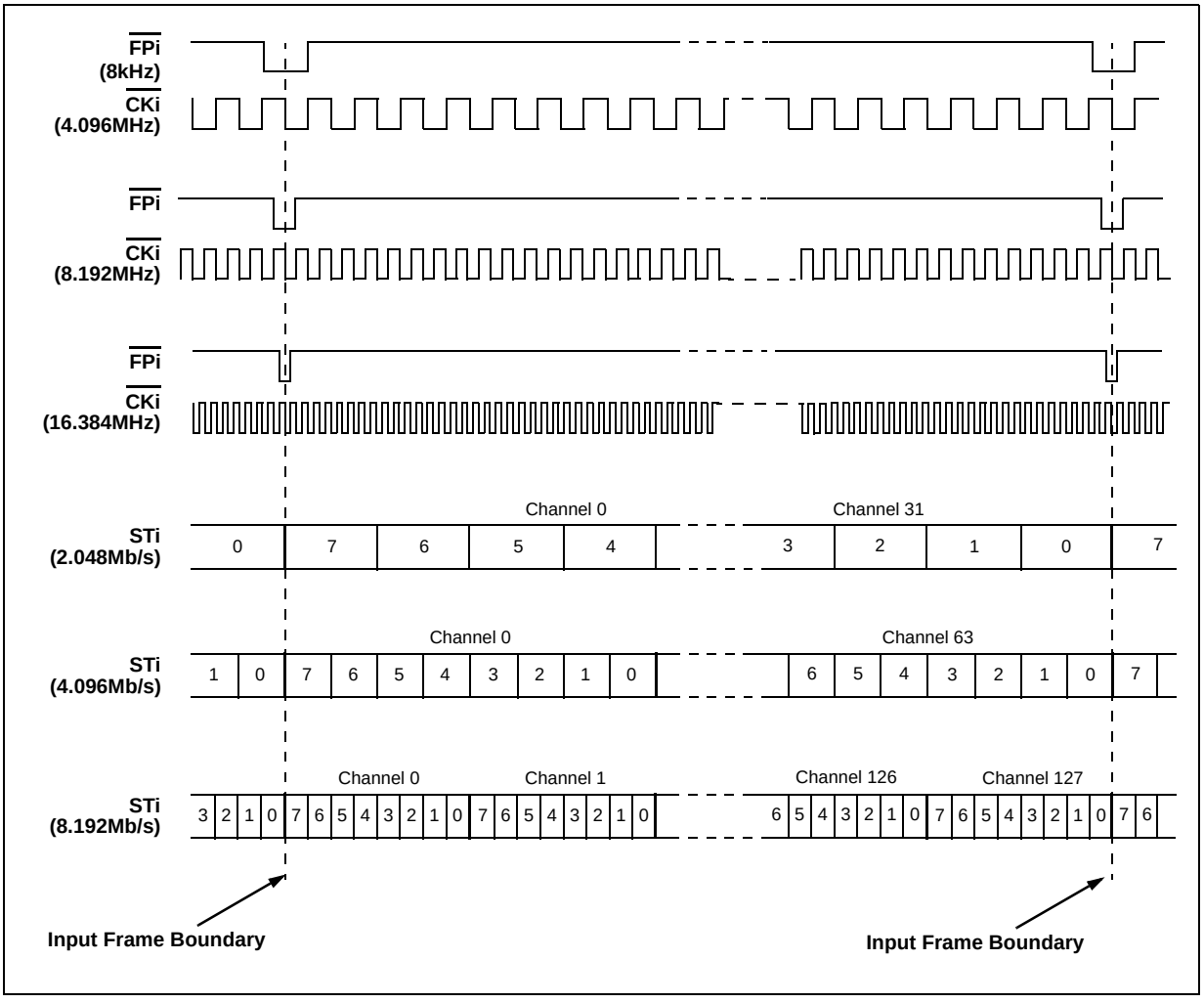

Figure 7 - ST-BUS Input Timing for Various Input Data Rates

2.1.4 Improved Input Jitter Tolerance with Frame Boundary Determinator

The ZL50012 has a Frame Boundary Determinator (FBD) allowing substantial increase of the CKi input clock jitter tolerance. The FBD circuit is enabled by setting the Control Register bits FBDEN and FBDMODE to HIGH. By default the FBD is disabled. Both the FBDEN and FBDMODE bits should be set HIGH during normal operation. The device can have 20 ns of input clock jitter tolerance (on CKi and FPi) when the FBD is fully enabled.

2.2 ST-Bus Output Data Rate and Output Timing

The device has sixteen ST-BUS serial data outputs. Any of the sixteen outputs can be programmed to deliver different data rates at 2.048 Mb/s, 4.096 Mb/s or 8.192 Mb/s.

2.2.1 ST-Bus Output Operation Mode

Any ST-Bus output can be programmed to deliver the data at 2.048 Mb/s, 4.096 Mb/s or 8.192 Mb/s mode using Bit 0 to 2 in the Stream Output Control Register, SOCR0 to SOCR15 as shown in Table 24 on page 48 and Table 25 on page 49.

2.2.2 Frame Pulse Output and Clock Output Timing

The device offers three frame pulse outputs, $\overline{FPo0}$, $\overline{FPo1}$ and $\overline{FPo2}$. All output frame pulses are 8kHz output signals. By default, output frame boundary is defined by the falling edge of the $\overline{CKo0}$, $\overline{CKo1}$ or $\overline{CKo2}$ output clocks while the $\overline{FPo0}$, $\overline{FPo1}$ or $\overline{FPo2}$ output frame pulse goes low respectively.

In addition to the default settings, users can also select different output frame pulse low cycles and output clock frequencies by programming the CKFP0, CKFP1 and CKFP2 bits in the Control Register. See Table 2, Table 3 and Table 4 for the bit usage in the Control Register:

CKFP0	$\overline{FPo0}$ Low Cycle	$\overline{CKo0}$
0	244 ns	4.096 MHz
1	122 ns	8.192 MHz

Table 2 - $\overline{FPo0}$ and $\overline{CKo0}$ Output Programming

CKFP1	$\overline{FPo1}$	$\overline{CKo1}$
0	61 ns	16.384 MHz
1	122 ns	8.192 MHz

Table 3 - $\overline{FPo1}$ and $\overline{CKo1}$ Output Programming

CKFP2	$\overline{FPo2}$	$\overline{CKo2}$
0	30 ns	32.768 MHz
1	61 ns	16.384 MHz

Table 4 - $\overline{FPo2}$ and $\overline{CKo2}$ Output Programming

The device also delivers positive or negative output frame pulse and ST-BUS output clock formats via the programming of the FP0P, FP1P, FP2P, CK0P, CK1P and CK2P bits in the Internal Mode Selection (IMS) register. By default, the device delivers the negative output frame pulse and negative output clock formats.

Figure 8 to Figure 13 describe the usage of the CKFP0, CKFP1, CKFP2, FP0P, FP1P, FP2P, CK0P, CK1P and CK2P in the Control Register and Internal Mode Selection Register:

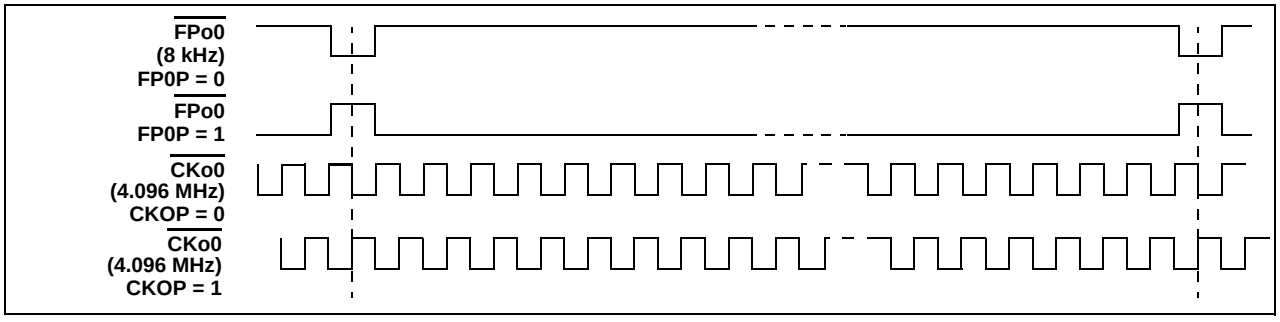

Figure 8 - $\overline{\text{FPo0}}$ and $\overline{\text{CKo0}}$ Output Timing when the CKFP0 bit = 0

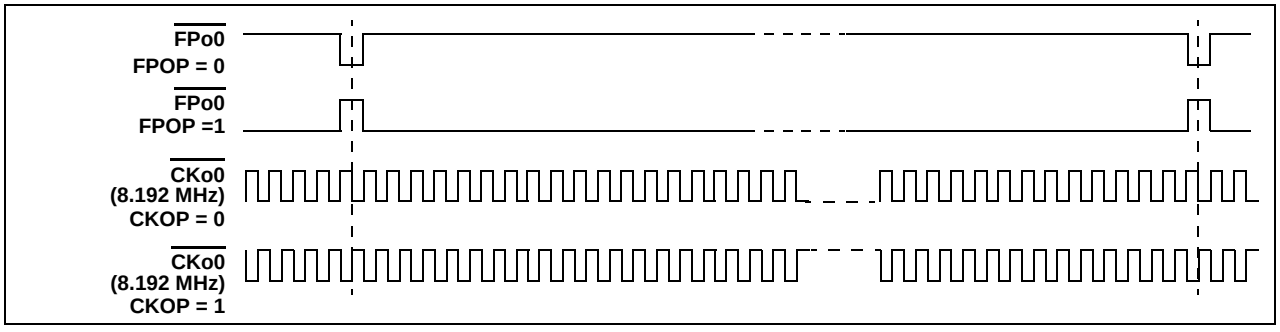

Figure 9 - $\overline{\text{FPo0}}$ and $\overline{\text{CKo0}}$ Output Timing when the CKFP0 bit = 1

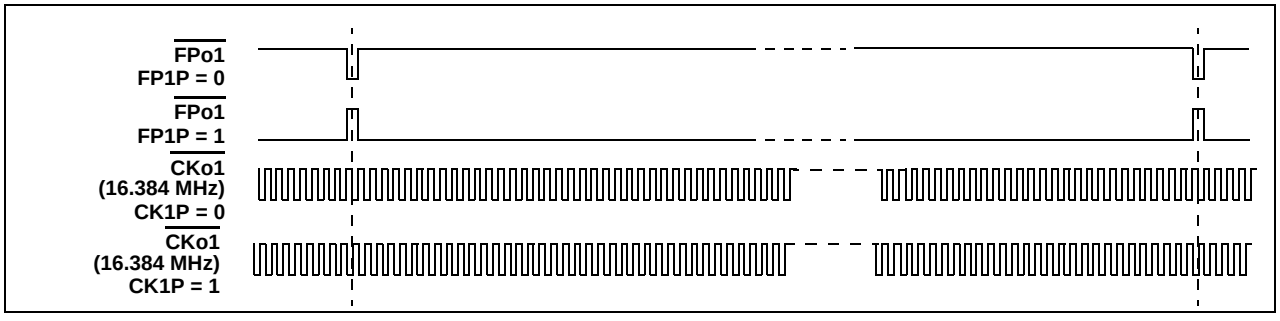

Figure 10 - $\overline{\text{FPo1}}$ and $\overline{\text{CKo1}}$ Output Timing when the CKFP1 bit = 0

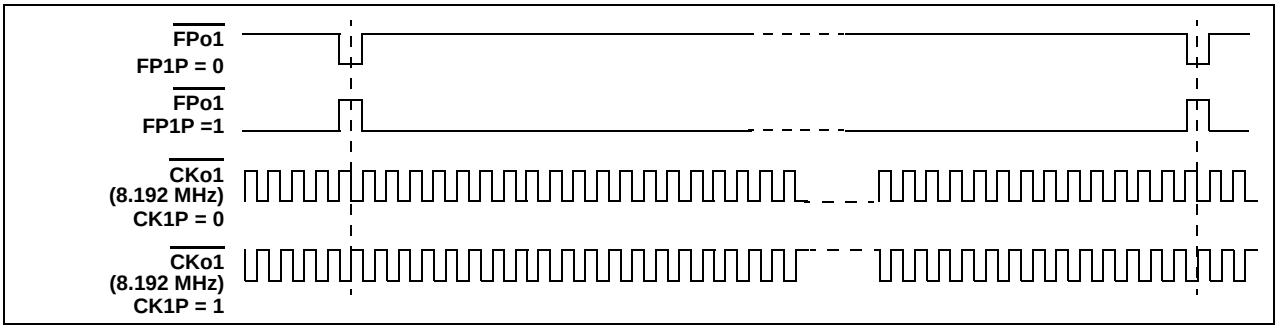

Figure 11 - $\overline{\text{FPo1}}$ and $\overline{\text{CKo1}}$ Output Timing when the CKFP1 bit = 1

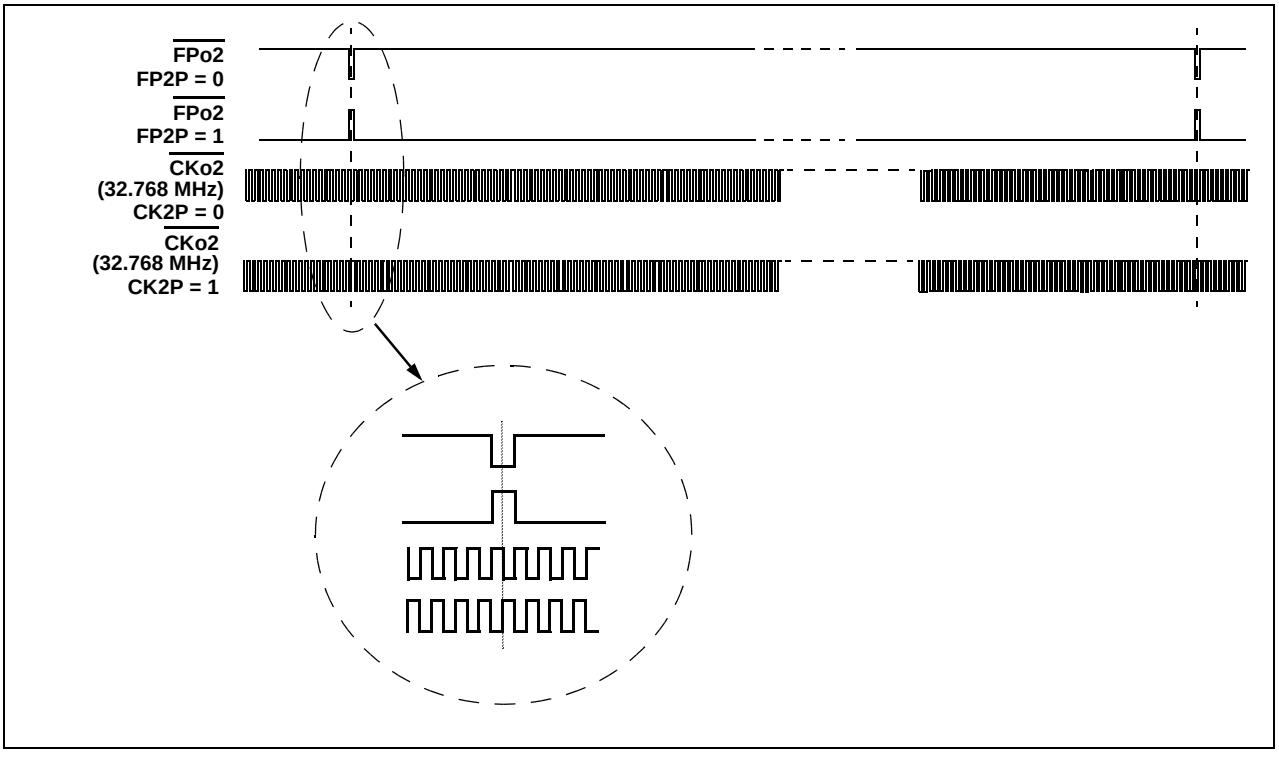

Figure 12 - $\overline{\text{FPo2}}$ and $\overline{\text{CKo2}}$ Output Timing when the CKFP2 bit = 0

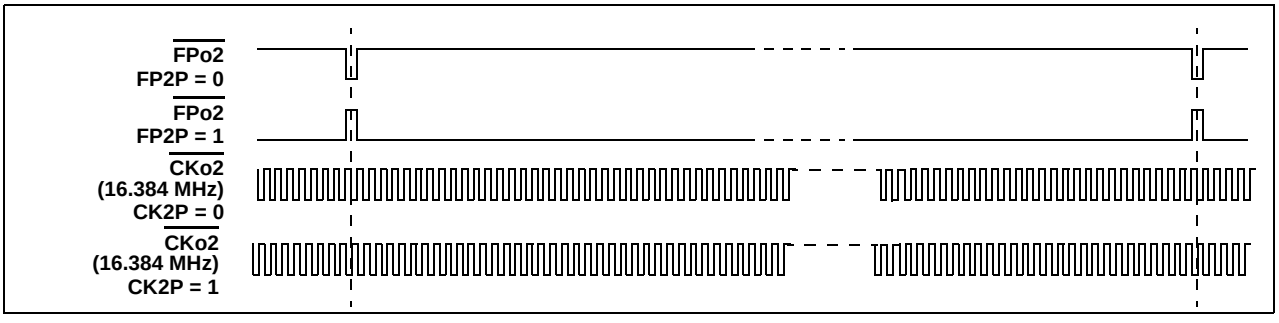

Figure 13 - $\overline{\text{FPo2}}$ and $\overline{\text{CKo2}}$ Output Timing when the CKFP2 bit = 1

2.2.3 ST-BUS Output Timing

By default, the output frame boundary is defined by the falling edge of the $\overline{CKo0}$, $\overline{CKo1}$ or $\overline{CKo2}$ output clock while the $\overline{FPo0}$, $\overline{FPo1}$ or $\overline{FPo2}$ output frame pulse goes low respectively. When the output data rates are 2.048 Mb/s, 4.096 Mb/s and 8.192 Mb/s, there are 32, 64 or 128 output channels per every ST-BUS frame respectively. Figure 14 describes the details.

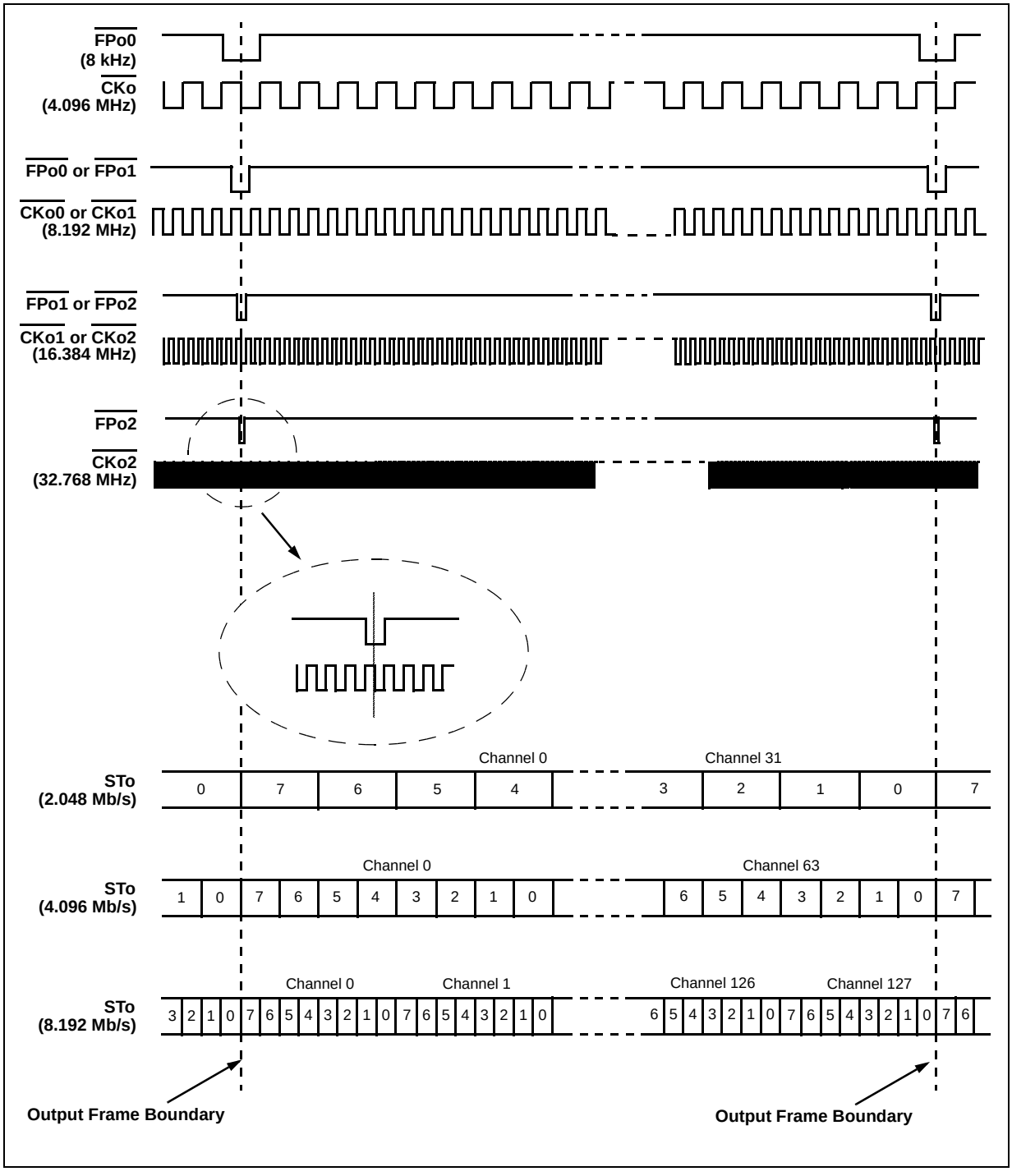

Figure 14 - ST-BUS Output Timing for Various Output Data Rates

2.3 Serial Data Input Delay and Serial Data Output Offset

Various registers are provided to adjust the input and output delays for every input and every output data stream. The input and output channel delay can vary from 0 to 31, 0 to 63 and 0 to 127 channel(s) for the 2.048 Mb/s, 4.096 Mb/s and 8.192 Mb/s modes respectively.

The input and output bit delay can vary from 0 to 7 bits. The fractional input bit delay can vary from 1/4, 1/2, 3/4 to 4/4 bit. The fractional output bit advancement can vary from 0, 1/4, 1/2 to 3/4 bit.

2.3.1 Input Channel Delay Programming

This feature allows each input stream to have a different input frame boundary with respect to the input frame boundary defined by the $\overline{FPi}$ and $\overline{CKi}$. By default, all input streams have channel delay of zero such that Ch0 is the first channel that appears after the input frame boundary (see Figure 15).

The input channel delay programming is enabled by setting Bit 3 to 9 in the Stream Input Delay Register (SIDR). The input channel delay can vary from 0 to 31, 0 to 63 and 0 to 127 for the 2.048 Mb/s, 4.096 Mb/s and 8.192 Mb/s modes respectively.

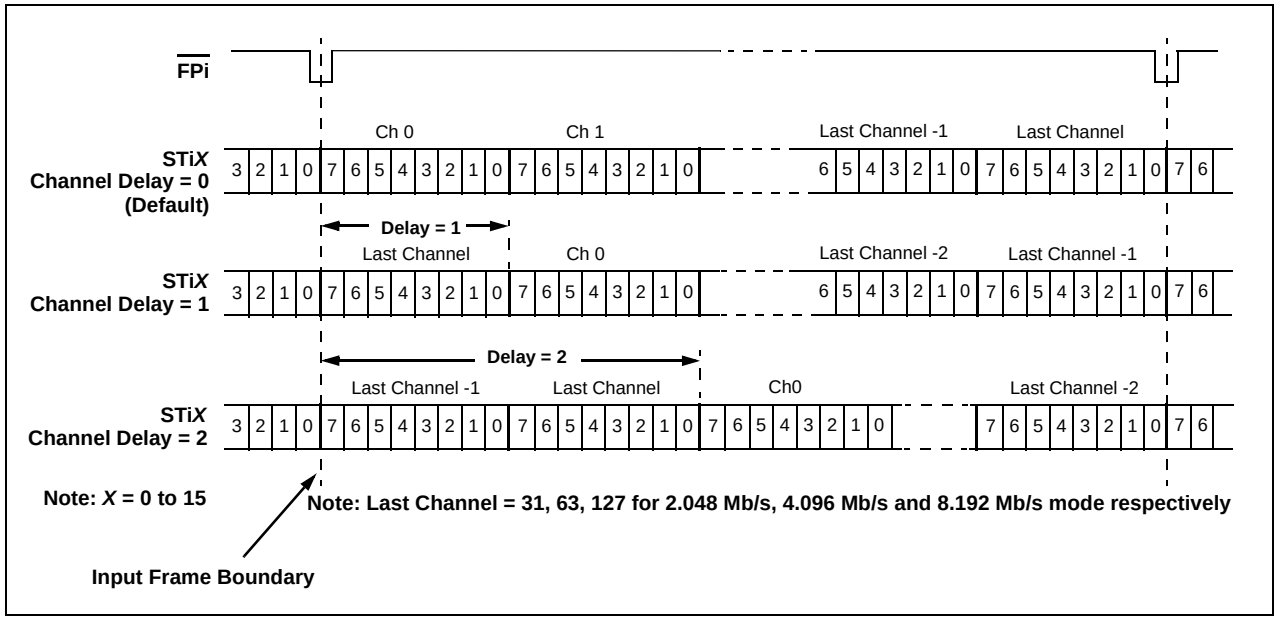

Figure 15 - Input Channel Delay Timing Diagram

2.3.2 Input Bit Delay Programming

In addition to the input channel delay programming, the input bit delay programming feature provides users with more flexibility when designing the switch matrices at high speed, in which the delay lines are easily created on PCM highways which are connected to the switch matrix cards.

By default, all input streams have zero bit delay such that Bit 7 is the first bit that appears after the input frame boundary, see Figure 16. The input delay is enabled by Bit 0 to 2 in the Stream Input Delay Registers (SIDR). The input bit delay can vary from 0 to 7 bits.

2.3.3 Fractional Input Bit Delay Programming

In addition to the input bit delay feature, the device allows users to change the sampling point of the input bit. By default, the sampling point is at 3/4 bit. Users can change the sampling point to 1/4, 1/2, 3/4 or 4/4 bit position by programming Bit 3 and 4 of the Stream Input Control Registers (SICR).

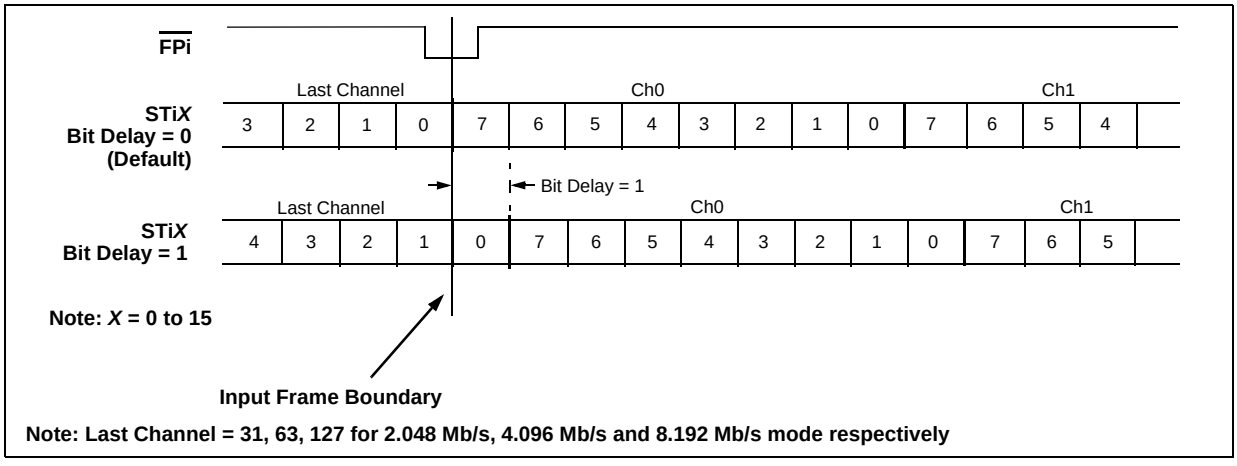

Figure 16 - Input Bit Delay Timing Diagram

2.3.4 Output Channel Delay Programming

This feature allows each output stream to have a different output frame boundary with respect to the output frame boundary defined by the output frame pulse ($\overline{FPo0}$, $\overline{FPo1}$ and $\overline{FPo2}$) and the output clock ($\overline{CKo0}$, $\overline{CKo1}$ or $\overline{CKo2}$). By default, all output streams have zero channel delay such that Ch 0 is the first channel that appears after the output frame boundary as shown in Figure 17. Different output channel delay can be set by programming Bit 5 to 11 in the Stream Output Offset Registers (SOOR). The output channel delay can vary from 0 to 31, 0 to 63 and 0 to 127 for the 2.048 Mb/s, 4.096 Mb/s and 8.192 Mb/s modes respectively.

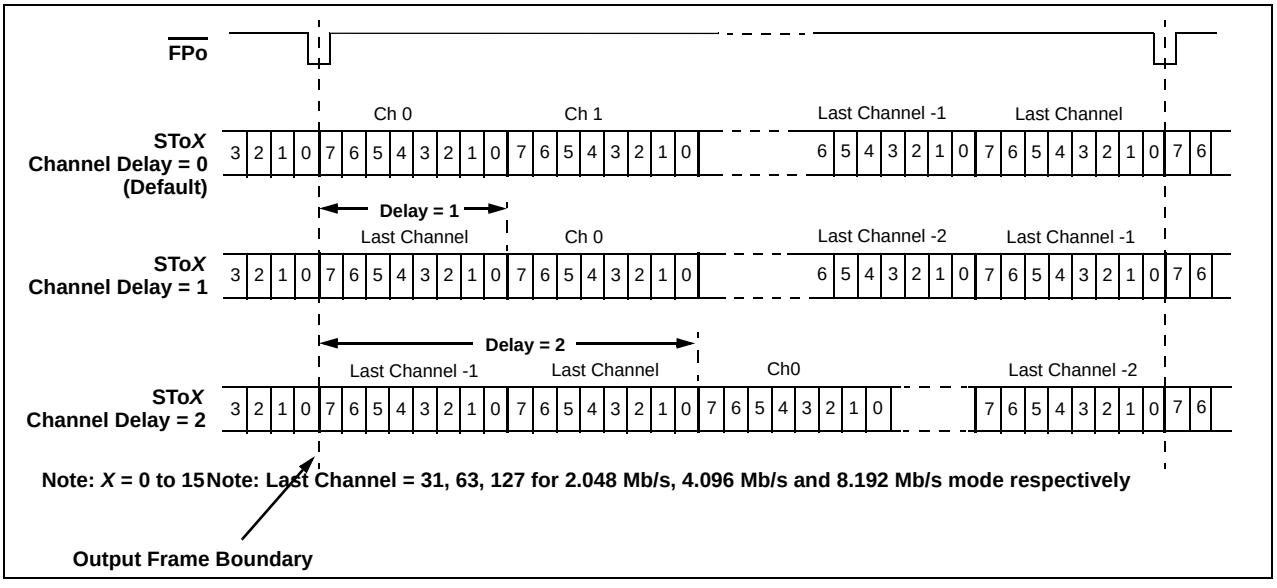

Figure 17 - Output Channel Delay Timing Diagram

2.3.5 Output Bit Delay Programming

This feature is used to delay the output data bit of individual output streams with respect to the output frame boundary. Each output stream can have its own bit delay value.

By default, all output streams have zero bit delay such that Bit 7 is the first bit that appears after the output frame boundary (see Figure 18 on page 25). Different output bit delay can be set by programming Bit 2 to 4 in the Stream Output Offset Registers. The output bit delay can vary from 0 to 7 bits.

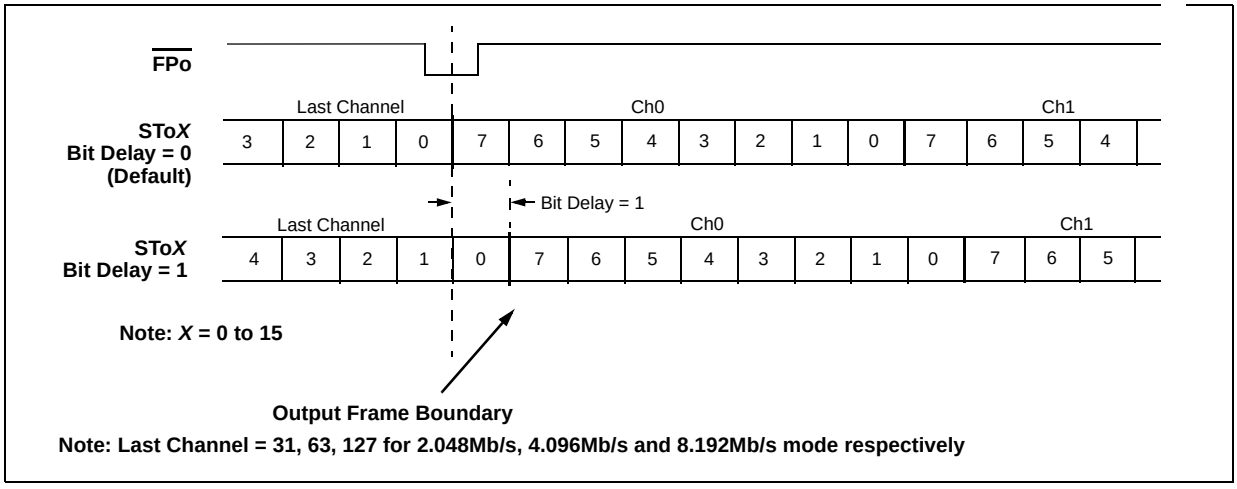

Figure 18 - Output Bit Delay Timing Diagram

2.3.6 Fractional Output Bit Advancement Programming

In addition to the output bit delay, the device is also capable of performing fractional output bit advancement. This feature offers a better resolution for the output bit delay adjustment. The fractional output bit advancement is useful in compensating for various parasitic loadings on the serial data output pins.

By default, all output streams have zero fractional bit advancement such that Bit 7 is the first bit that appears after the output frame boundary as shown in Figure 19. The fractional output bit advancement is enabled by Bit 0 to 1 in the Stream Output Offset Registers. The fractional bit advancement can vary from 0, 1/4, 1/2 or 3/4 bit.

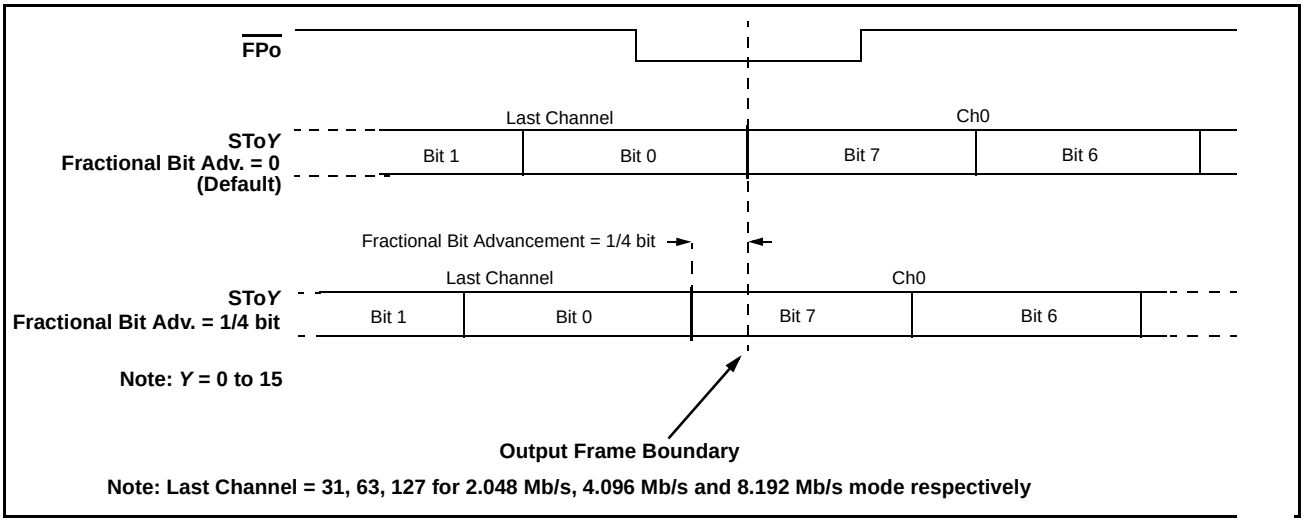

Figure 19 - Fractional Output Bit Advancement Timing Diagram

2.3.7 External High Impedance Control, STOHZ 0 to 15

The STOHZ 0 to 15 outputs are provided to control the external tristate ST-BUS drivers for per-channel high impedance operations. The STOHZ outputs are sent out in 32, 64 or 128 timeslots corresponding to the output channels for 2.048 Mb/s, 4.096 Mb/s and 8.192 Mb/s output streams respectively. Each control timeslot lasts for one channel time.

When the ODE pin is high, the STOHZ 0 - 15 are enabled. When the ODE pin or the $\overline{\text{RESET}}$ pin is low, the STOHZ 0 - 15 are driven high. STOHZ outputs are also driven high if their corresponding ST-BUS outputs are not in use.

Figure 20 gives an example when channel 2 of a given ST-BUS output is programmed in the high impedance state, the corresponding STOHZ pin drives high for one channel time at the channel 2 timeslot.

By default, the output timing of the STOHZ signals follow the same timing as their corresponding STo signals including any user-programmed output channel and bit delay and fractional bit advancement. In addition, the device allows users to advance the STOHZ signals from their default positions to a maximum of four 15.2 ns steps (or four 1/4 bit steps) using Bit 3 to 5 of the Stream Output Control Register (SOCR). Bit 6 in the Stream Output Control Register selects the step resolution as 15.2 ns or 1/4 data bit. The additional advancement feature allows the STOHZ signals to better match the high impedance timing required by the external ST-BUS drivers.

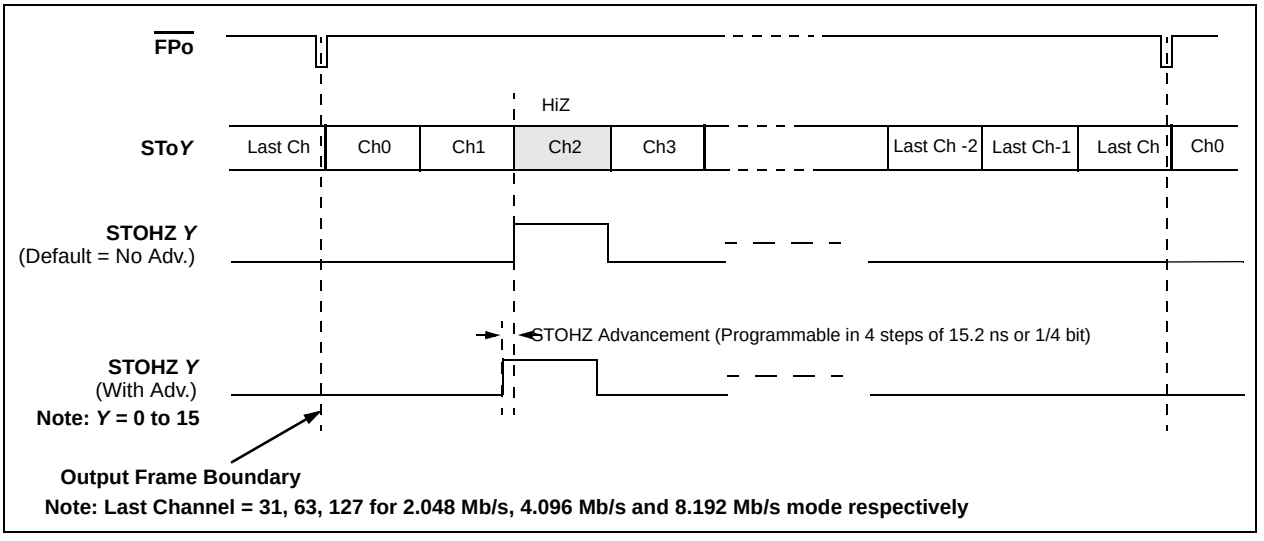

Figure 20 - Example: External High Impedance Control Timing

2.4 Data Delay Through The Switching Paths

To maintain the channel integrity in the constant delay mode, the usage of the input channel delay and output channel delay modes affect the data delay through various switching paths due to additional data buffers. The usage of these data buffers is enabled by the input and output channel delay bits (STIN#CD6-0 and STO#CD6-0) in the Stream Input Delay and Stream Output Offset Registers. However, the input and output bit delay or the input and output fractional bit offset have no impact on the overall data throughput delay.

In the following paragraphs, the data throughput delay (T) is expressed as a function of ST-BUS frames, input channel number (m), output channel number (n), input channel delay (α) and output channel delay (β). Table 5 describes the variable range for input streams and Table 6 describes the variable range for output streams. Table 7 summarizes the data throughput delay under various input channel and output channel delay conditions.

Input Stream Data Rate	Input Channel Number (m)	Possible Input channel delay (α)
2 Mb/s	0 to 31	1 to 31
4 Mb/s	0 to 63	1 to 63
8 Mb/s	0 to 127	1 to 127

Table 5 - Variable Range for Input Streams

Output Stream Data Rate	Output Channel Number (n)	Possible Output channel delay (β)
2 Mb/s	0 to 31	1 to 31
4 Mb/s	0 to 63	1 to 63
8 Mb/s	0 to 127	1 to 127

Table 6 - Variable Range for Output Streams

Input Channel Delay OFF Output Channel Delay OFF	Input Channel Delay ON Output Channel Delay OFF	Input Channel Delay OFF Output Channel Delay ON	Input Channel Delay ON Output Channel Delay ON
T = 2 frames + (n-m)	T = 3 frames - α + (n-m)	T = 2 frames + β + (n-m)	T= 3 frames - α + β + (n-m)

Table 7 - Data Throughput Delay

By default, when the input channel delay and output channel delay are set to zero, the data throughput delay (**T**) is: **T = 2 frames + (m-n)**. Figure 21 shows the throughput delay when the input Ch0 is switched to the output Ch0.

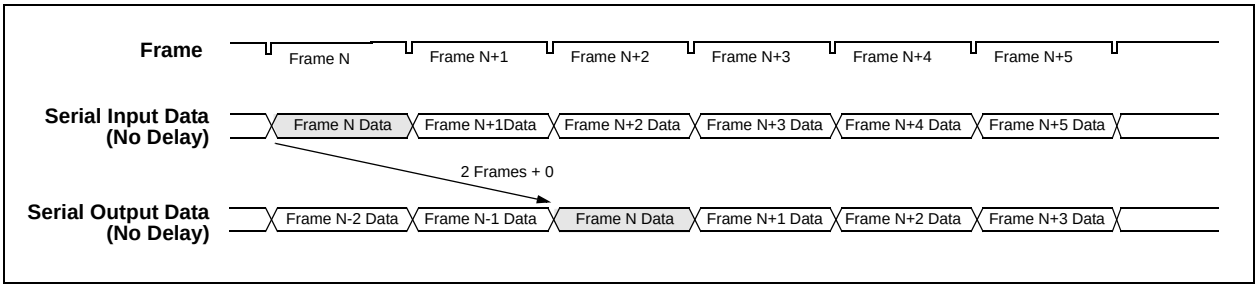

Figure 21 - Data Throughput Delay when input and output channel delay are disabled for Input Ch0 switched to Output Ch0

When the input channel delay is enabled and the output channel delay is disabled, the data throughput delay is: **T = 3 frames - α + (m-n)**. Figure 22 shows the data throughput delay when the input Ch0 is switched to the output Ch0.

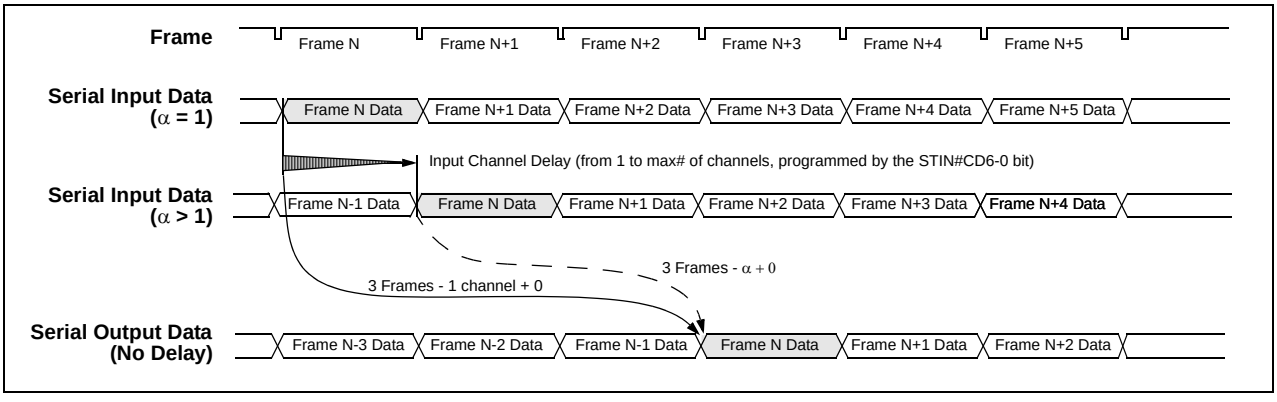

Figure 22 - Data Throughput Delay when input channel delay is enabled and output channel delay is disabled for Input Ch0 switched to Output Ch0

When the input channel delay is disabled and the output channel delay is enabled, the throughput delay is: **T = 2 frames + β + (m-n)**. Figure 23 shows the data throughput delay when the input Ch0 is switched to the output Ch0.

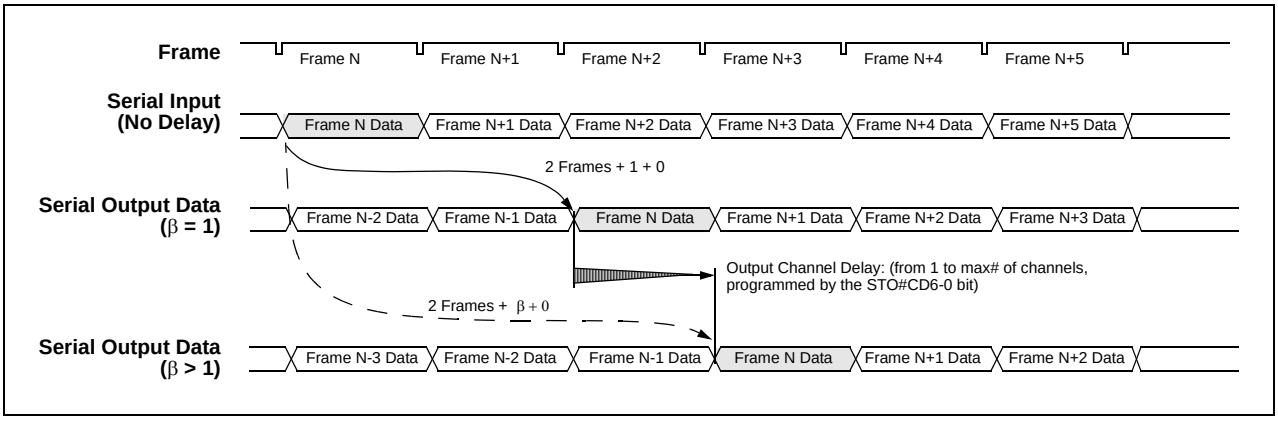

Figure 23 - Data Throughput Delay when input channel delay is disabled and output channel delay is enabled for Input Ch0 switch to Output Ch0

When the input channel delay and the output channel delay are enabled, the data throughput delay is: **T = 3 frames - α + β + (m-n)**. Figure 24 shows the data throughput delay when the input Ch0 is switched to the output Ch0.

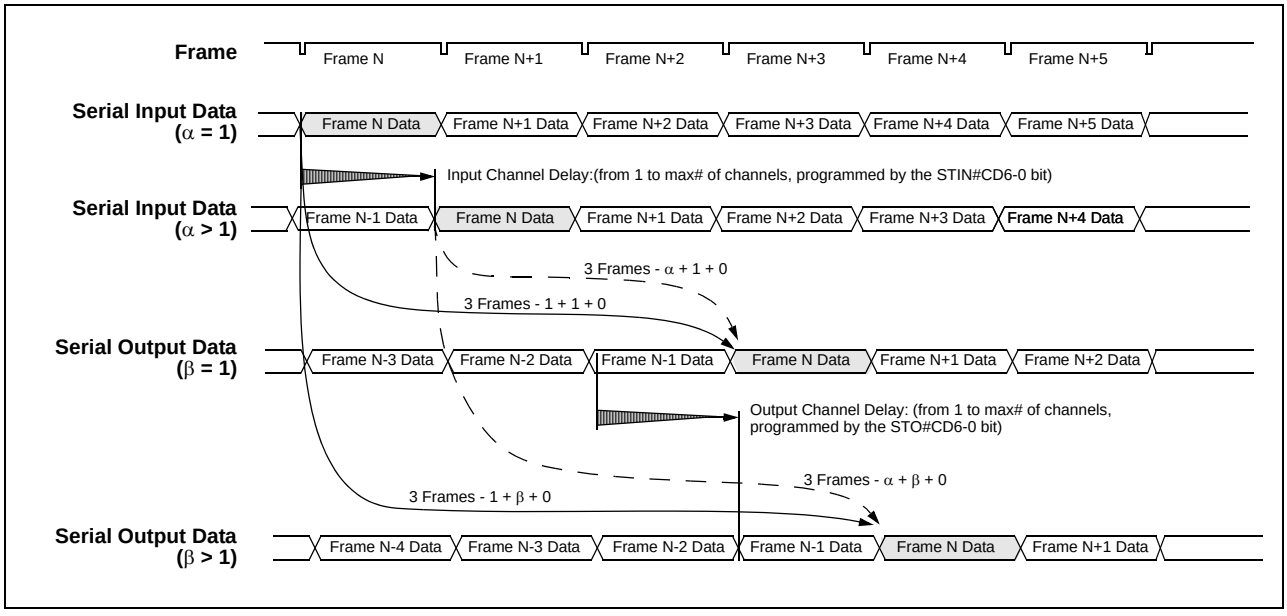

Figure 24 - Data Throughput Delay when input and output channel delay are enabled for Input Ch0 switched to Output Ch0

2.5 Connection Memory Description

The connection memory is 12-bit wide. There are 512 memory locations to support the ST-BUS serial outputs STo0-15. The address of each connection memory location corresponds to an output destination stream number and an output channel address. See Table 28 on page 52 for the connection memory address map.

When Bit 0 of the connection memory is **low**, Bit 1 to 7 define the source (input) channel address and Bit 8 to 11 define the source (input) stream address. Once the source stream and channel addresses are programmed by the microprocessor, the contents of the data memory at the selected address are switched to the mapped output stream and channel. See Table 29 on page 53 for details on the memory bit assignment when Bit 0 of the connection memory is low.

When Bit 0 of the connection memory is **high**, Bit 1 and 2 define the per-channel control modes of the output streams, the per-channel high impedance output control, the per-channel message and the per-channel BER test modes. In the message mode, the 8-bit message data located in Bit 3 to 10 of the connection memory will be transferred directly to the mapped output stream. See Table 30 on page 53 for details on the memory bit assignment when Bit 0 of the connection memory is high.

2.5.1 Connection Memory Block Programming

This feature allows fast initialization of the entire connection memory after power up. When block programming mode is enabled, the content of Bit 1 to 3 in the Internal Mode Selection (IMS) Register will be loaded into Bit 0 to 2 of all the 512 connection memory locations. The other bit positions of the connection memory will be loaded with zeros.

Memory block programming procedure:

(Assumption: The MBPE and MBPS bits are both low at the start of the procedure)

- Program Bit 1 to 3 (BPD0 to BPD2) in the IMS (Internal Mode Selection) register.
- Set the Memory Block Programming Enable (MBPE) bit in the Control Register to high to enable the block programming mode.
- Set the Memory Block Programming Start (MBPS) bit to high in the IMS Register to start the block programming. The BPD0 to BPD2 bits will be loaded into Bit 0 to 2 of the connection memory. The other bit positions of the connection memory will be loaded with zeros. The memory content after block programming is shown in Table 8.
- It takes 50µs for the connection memory to be loaded with the bit pattern defined by the BPD0 to BPD2 bits.
- After loading the bit pattern to the entire connection memory, the device will reset the MBPS bit to low, indicating that the process has finished.
- Upon completion of the block programming, set the MBPE bit from high to low to disable the block programming mode.

Note: Once the block programming is started, it can be terminated at any time prior to completion by setting the MBPS bit or the MBPE bit to low. If the MBPE bit is used to terminate the block programming before completion, users have to set the MBPS bit from high to low before enabling other device operation.

11	10	9	8	7	6	5	4	3	2	1	0
0	0	0	0	0	0	0	0	0	BPD2	BPD1	BPD0

Table 8 - Connection Memory in Block Programming Mode

2.6 Bit Error Rate (BER) Test

The ZL50012 has one on-chip BER transmitter and one BER receiver. The transmitter can transmit onto a single STo output stream only. The transmitter provides a BER sequence (2^{15}-1 Pseudo Random Code) which can start from any channel in the frame and lasts from one channel up to one frame time (125 μs). The transmitter output channel(s) are specified by programming the connection memory location(s) corresponding to the channel(s) of the selected output stream: Bit 0 to 2 of the connection memory location(s) should be programmed to the BER test mode (see Table 30 on page 53).

Multiple connection memory locations can be programmed for BER test such that the BER patterns can be transmitted for several output channels which are consecutive. If the transmitting output channels are not consecutive, the BER receiver will not compare the bit patterns correctly.

The number of output channels which the BER transmitter occupies also has to be the same as the number of channels defined in the BER Length Register. The BER Length Register defines how many BER channels to be monitored by the BER receiver.

Registers used for setting up the BER test are as follows:

- Control Register (**CR**) - The CBER bit is used to clear the bit error counter and the BER Count Register (BCR). The SBER bit is used to start or stop the BER transmitter and BER receiver.
- BER Start Receiving Register (**BSRR**) - Defines the input stream and channel from where the BER sequence will start to be compared.
- BER Length Register (**BLR**) - Defines how many channels the sequence will last.
- BER Count Register (**BCR**) - Contains the number of counted errors. When the error count reaches Hex FFFF, the bit error counter will stop so that it will not overflow. Consequently the BER Count Register will also stop at FFFF. The CBER bit in the Control Register is used to reset the bit error counter and the BER Count Register.

As described above, the SBER bit in the control register controls the BER transmitter and receiver. To carry out the BER test, users should set the SBER bit to zero to disable the BER transmitter during the programming of the connection memory for the BER test. When the BER transmitter is disabled, the transmitter output is all ones. Hence any output channel whose connection memory has been programmed to BER test mode will also output all ones. Upon the completion of programming the connection memory for the BER test, set the SBER bit to one to start the BER transmitter and receiver for the BER testing. They must be allowed to run for several frames (2 frames plus the network delay between STo and STi) before the BER receiver can correctly identify errors in the pattern. Thus after this time the bit error counter should be reset by using the CBER bit in the Control Register - set CBER to one then back to zero. From now on, the count will be the actual number of errors which occurred during the test. The count will stop at FFFF and the counter will not increment even if more errors occurred.

2.7 Quadrant frame programming

By programming the input stream control registers (SICR0 to 15), users can divide one frame of input data into four quadrant frames and can force the Least Significant Bit (LSB, bit 0 in Figure 7 on page 18), of every input channel in these quadrants into "1" for the bit robbed signaling purpose. The four quadrant frames are defined as shown in Table 9.

Data Rate	Quadrant 0	Quadrant 1	Quadrant 2	Quadrant 3
2.048 Mb/s	Ch 0 to 7	Ch 8 to 15	Ch 16 to 23	Ch 24 to 31
4.096 Mb/s	Ch 0 to 15	Ch 16 to 31	Ch 32 to 47	Ch 48 to 63
8.192 Mb/s	Ch 0 to 31	Ch 32 to 63	Ch 64 to 95	Ch 96 to 127

Table 9 - Definition of the Four Quadrant Frames

When a quadrant frame enable bit (STIN#QEN0, STIN#QEN1, STIN#QEN2 or STIN#QEN3) is set to high, the LSB of every input channels in the quadrant is forced to "1". See Table 10 to Table 13 for details:

STIN#QEN0	Action
1	Replace LSB of every channel in Quadrant 0 with "1"
0	No bit replacement occurs in Quadrant 0

Table 10 - Quadrant Frame 0 LSB Replacement

STIN#QEN1	Action
1	Replace LSB of every channel in Quadrant 1 with "1"
0	No bit replacement occurs in Quadrant 1

Table 11 - Quadrant Frame 1 LSB Replacement

STIN#QEN2	Action
1	Replace LSB of every channel in Quadrant 2 with "1"
0	No bit replacement occurs in Quadrant 2

Table 12 - Quadrant Frame 2 LSB Replacement

STIN#QEN3	Action
1	Replace LSB of every channel in Quadrant 3 with "1"
0	No bit replacement occurs in Quadrant 3

Table 13 - Quadrant Frame 3 LSB Replacement

2.8 Microprocessor Port

The device supports the non-multiplexed microprocessor. The microprocessor port consists of a 16-bit parallel data bus (D0 to 15), a 12-bit address bus (A0 to 11) and four control signals ($\overline{CS}$, $\overline{DS}$, R/$\overline{W}$ and $\overline{DTA}$). The parallel microprocessor port provides fast access to the internal registers, the connection and the data memories.

The connection memory locations can be read or written via the 16-bit microprocessor port. On the other hand, the data memory locations can only be read (but not written) from the microprocessor port.

For the connection memory write operation, D0 to 11 of the data bus will be used and D12 to 15 are ignored (D12 to 15 should be driven low). For the connection memory read operation, D0 to D11 will be used and D12 to D15 will output zeros. For the data memory read operation, D0 to D7 will be used and D8 to D15 will output zeros.

See Table 28 on page 52 for the address mapping of the data memory. Refer to Figure 36 on page 65 for the microprocessor port timing.

3.0 Device Reset and Initialization

The $\overline{RESET}$ pin is used to reset the device. When the pin is low, it synchronously puts the device in its reset state. It disables the STo0 - 15 outputs, drives the STOHZ 0 - 15 outputs to high, clears the device registers and the internal counters.

Upon power up, the device should be initialized as follows:

- Set ODE pin to low to disable the STo0-15 output and to drive the STOHZ 0-15 to high.
- Set the $\overline{TRST}$ pin to low to disable the JTAG TAP controller.
- Reset the device by pulsing the $\overline{RESET}$ pin to low for longer than 1ms.
- After releasing the $\overline{RESET}$ pin from low to high, wait for 600 µs for the APLL module to be stabilized before starting the first microprocessor port access cycle.
- Program the register to define the frequency of the $\overline{CKi}$ input.
- Wait for 600 µs for the APLL module to be stabilized before starting the next microprocessor port access cycle.
- Use the memory block programming mode to initialize the connection memory.
- Release the ODE pin to high after the connection memory is programmed such that bus contention will not occur at the serial stream outputs STo0-15.

4.0 JTAG Support

The ZL50012 JTAG interface conforms to the Boundary-Scan IEEE1149.1 standard. The operation of the boundary-scan circuitry is controlled by an external Test Access Port (TAP) Controller.

4.1 Test Access Port (TAP)

The Test Access Port (TAP) accesses the ZL50012 test functions. It consists of three input pins and one output pin as follows:

- **Test Clock Input (TCK)** - TCK provides the clock for the test logic. The TCK does not interfere with any on-chip clock and thus remains independent in the functional mode. The TCK permits shifting of test data into or out of the Boundary-Scan register cells concurrently with the operation of the device and without interfering with the on-chip logic.
- **Test Mode Select Input (TMS)** - The TAP Controller uses the logic signals received at the TMS input to control test operations. The TMS signals are sampled at the rising edge of the TCK pulse. This pin is internally pulled to Vdd when it is not driven from an external source.

- **Test Data Input (TDi)** - Serial input data applied to this port is fed either into the instruction register or into a test data register, depending on the sequence previously applied to the TMS input. Both registers are described in a subsequent section. The received input data is sampled at the rising edge of TCK pulses. This pin is internally pulled to Vdd when it is not driven from an external source.
- **Test Data Output (TDo)** - Depending on the sequence previously applied to the TMS input, the contents of either the instruction register or data register are serially shifted out towards the TDO. The data out of the TDO is clocked on the falling edge of the TCK pulses. When no data is shifted through the boundary scan cells, the TDO driver is set to a high impedance state.
- **Test Reset (TRST)** - Resets the JTAG scan structure. This pin is internally pulled to Vdd when it is not driven from an external source.

4.2 Instruction Register

The ZL50012 uses the public instructions defined in the IEEE 1149.1 standard. The JTAG Interface contains a four-bit instruction register. Instructions are serially loaded into the instruction register from the TDI when the TAP Controller is in its shifted-IR state. These instructions are subsequently decoded to achieve two basic functions: to select the test data register that may operate while the instruction is current and to define the serial test data register path that is used to shift data between TDI and TDO during data register scanning.

4.3 Test Data Register

As specified in IEEE 1149.1, the ZL50012 JTAG Interface contains three test data registers:

- **The Boundary-Scan Register** - The Boundary-Scan register consists of a series of Boundary-Scan cells arranged to form a scan path around the boundary of the ZL50012 core logic.
- **The Bypass Register** - The Bypass register is a single stage shift register that provides a one-bit path from TDI to its TDO.
- **The Device Identification Register** - The JTAG device ID for the ZL50012 is $0C35C14B_H$.

Version<31:28>:	0000
Part No. <27:12>:	1100 0011 0101 1100
Manufacturer ID<11:1>:	0001 0100 101
LSB<0>:	1

4.4 BSDL

A BSDL (Boundary Scan Description Language) file is available from Zarlink Semiconductor to aid in the use of the IEEE 1149 test interface.

5.0 Register Address Mapping

External Address A11 - A0	CPU Access	Register
000_H	R/W	Control Register, CR
001_H	R/W	Internal Mode Selection, IMS
010_H	R/W	BER Start Receive Register, BSRR
011_H	R/W	BER Length Register, BLR
012_H	Read Only	BER Count Register, BCR
030_H	Read Only	Reserved
031_H	Read Only	Reserved
032_H	Read Only	Reserved
100_H	R/W	Stream0 Input Control Register, SICR0
101_H	R/W	Stream0 Input Delay Register, SIDR0
102_H	R/W	Stream1 Input Control Register, SICR1
103_H	R/W	Stream1 Input Delay Register, SIDR1
104_H	R/W	Stream2 Input Control Register, SICR2
105_H	R/W	Stream2 Input Delay Register, SIDR2
106_H	R/W	Stream3 Input Control Register, SICR3
107_H	R/W	Stream3 Input Delay Register, SIDR3
108_H	R/W	Stream4 Input Control Register, SICR4
109_H	R/W	Stream4 Input Delay Register, SIDR4
$10A_H$	R/W	Stream5 Input Control Register, SICR5
$10B_H$	R/W	Stream5 Input Delay Register, SIDR5
$10C_H$	R/W	Stream6 Input Control Register, SICR6
$10D_H$	R/W	Stream6 Input Delay Register, SIDR6
$10E_H$	R/W	Stream7 Input Control Register, SICR7
$10F_H$	R/W	Stream7 Input Delay Register, SIDR7
110_H	R/W	Stream8 Input Control Register, SICR8
111_H	R/W	Stream8 Input Delay Register, SIDR8
112_H	R/W	Stream9 Input Control Register, SICR9
113_H	R/W	Stream9 Input Delay Register, SIDR9
114_H	R/W	Stream10 Input Control Register, SICR10
115_H	R/W	Stream10 Input Delay Register, SIDR10
116_H	R/W	Stream11 Input Control Register, SICR11
117_H	R/W	Stream11 Input Delay Register, SIDR11
118_H	R/W	Stream12 Input Control Register, SICR12
119_H	R/W	Stream12 Input Delay Register, SIDR12
$11A_H$	R/W	Stream13 Input Control Register, SICR13

Table 14 - Address Map for Device Specific Registers

External Address A11 - A0	CPU Access	Register
$11B_H$	R/W	Stream13 Input Delay Register, SIDR13
$11C_H$	R/W	Stream14 Input Control Register, SICR14
$11D_H$	R/W	Stream14 Input Delay Register, SIDR14
$11E_H$	R/W	Stream15 Input Control Register, SICR15
$11F_H$	R/W	Stream15 Input Delay Register, SIDR15
200_H	R/W	Stream0 Output Control Register, SOCR0
201_H	R/W	Stream0 Output Delay Register, SOOR0
202_H	R/W	Stream1 Output Control Register, SOCR1
203_H	R/W	Stream1 Output Delay Register, SOOR1
204_H	R/W	Stream2 Output Control Register, SOCR2
205_H	R/W	Stream2 Output Delay Register, SOOR2
206_H	R/W	Stream3 Output Control Register, SOCR3
207_H	R/W	Stream3 Output Delay Register, SOOR3
208_H	R/W	Stream4 Output Control Register, SOCR4
209_H	R/W	Stream4 Output Delay Register, SOOR4
$20A_H$	R/W	Stream5 Output Control Register, SOCR5
$20B_H$	R/W	Stream5 Output Delay Register, SOOR5
$20C_H$	R/W	Stream6 Output Control Register, SOCR6
$20D_H$	R/W	Stream6 Output Delay Register, SOOR6
$20E_H$	R/W	Stream7 Output Control Register, SOCR7
$20F_H$	R/W	Stream7 Output Delay Register, SOOR7
210_H	R/W	Stream8 Output Control Register, SOCR8
211_H	R/W	Stream8 Output Delay Register, SOOR8
212_H	R/W	Stream9 Output Control Register, SOCR9
213_H	R/W	Stream9 Output Delay Register, SOOR9
214_H	R/W	Stream10 Output Control Register, SOCR10
215_H	R/W	Stream10 Output Delay Register, SOOR10
216_H	R/W	Stream11 Output Control Register, SOCR11
217_H	R/W	Stream11 Output Delay Register, SOOR11
218_H	R/W	Stream12 Output Control Register, SOCR12
219_H	R/W	Stream12 Output Delay Register, SOOR12
$21A_H$	R/W	Stream13 Output Control Register, SOCR13
$21B_H$	R/W	Stream13 Output Delay Register, SOOR13
$21C_H$	R/W	Stream14 Output Control Register, SOCR14
$21D_H$	R/W	Stream14 Output Delay Register, SOOR14
$21E_H$	R/W	Stream15 Output Control Register, SOCR15
$21F_H$	R/W	Stream15 Output Delay Register, SOOR15

Table 14 - Address Map for Device Specific Registers

6.0 Detail Register Description

External Read/Write Address: 000_H
Reset Value: 0000_H

15	14	13	12	11	10	9	8	7	6	5	4	3	2	1	0
FBD MODE	0	FBD EN	CKIN 2	CKIN 1	CKIN 0	CKFP 2	CKFP 1	CKFP 0	CBER	SBER	MBPE	OSB	MS2	MS1	MS0

Bit	Name	Description
15	FBD-MODE	**Frame Boundary Determination Mode Select.** When either the FBDEN or FBDMODE bit is set low, the frame boundary discriminator (FBD) is disabled. When both the FBDEN and FBDMODE bits are set HIGH, the frame discriminator (FBD) is enabled. The device will have 20 ns of input clock jitter tolerance (on CKi and FPi) when the FBD is enabled. By default, the FBDEN and FBDMODE bits are Low. Both the FBDEN and FBDMODE bits should be set HIGH during normal operation.
14	Unused	**Reserved.** In normal functional mode, this bit MUST be set to zero.
13	FBDEN	**Frame Boundary Determinator Enable.** When either the FBDEN or FBDMODE bit is set low, the frame boundary discriminator (FBD) is disabled. When both the FBDEN and FBDMODE bits are set HIGH, the frame discriminator (FBD) is enabled. The device will have 20 ns of input clock jitter tolerance (on CKi and FPi) when the FBD is enabled. By default, the FBDEN and FBDMODE bits are Low. Both the FBDEN and FBDMODE bits should be set HIGH during normal operation.
12 - 10	CKIN2-0	**Input ST Bus Clock ($\overline{CKi}$) and Frame Pulse ($\overline{FPi}$) Selection.** CKIN2 - 0 / $\overline{FPi}$ Low Cycle / $\overline{CKi}$ 000 / 61 ns / 16.384 MHz 001 / 122 ns / 8.192 MHz 010 / 244 ns / 4.096 MHz 011 - 111 / Reserved
9	CKFP2	**Output ST Bus clock $\overline{CKo2}$ and frame pulse $\overline{FPo2}$ Selection.** When this bit is low, CKo2 is 32.768 MHz clock and FPo2 is 30 ns wide frame pulse When this bit is high, CKo2 is 16.384 MHz clock and FPo2 is 61 ns wide frame pulse
8	CKFP1	**Output ST Bus clock $\overline{CKo1}$ and frame pulse $\overline{FPo1}$ Selection.** When this bit is low, CKo1 is 16.384 MHz clock and FPo1 is 61 ns wide frame pulse When this bit is high, CKo1 is 8.192 MHz clock and FPo1 is 122 ns wide frame pulse
7	CKFP0	**Output ST Bus clock $\overline{CKo0}$ and frame pulse $\overline{FPo0}$ Selection.** When this bit is low, CKo0 is 4.096 MHz clock and FPo0 is 244 ns wide frame pulse When this bit is high, CKo0 is 8.192 MHz clock and FPo0 is 122 ns wide frame pulse

Table 15 - Control Register (CR) Bits

External Read/Write Address: 000_H
Reset Value: 0000_H

15	14	13	12	11	10	9	8	7	6	5	4	3	2	1	0
FBD MODE	0	FBD EN	CKIN 2	CKIN 1	CKIN 0	CKFP 2	CKFP 1	CKFP 0	CBER	SBER	MBPE	OSB	MS2	MS1	MS0

Bit	Name	Description
6	CBER	**Bit Error Rate Counter Clear:** When this bit is high, it resets the internal bit error counter and the content of the bit error count register (BCR) to zero. Upon completion of the reset, set this bit to zero.
5	SBER	**Bit Error Rate Test Start:** When this bit is high, it enables the BER transmitter and receiver; starts the bit error rate test. The bit error test result is kept in the bit error count (BCR) register. Upon the completion of the BER test, set this bit to zero.
4	MBPE	**Memory Block Programming Enable:** When this bit is high, the connection memory block programming mode is enabled to program Bit 0 to Bit 2 of the connection memory. When it is low, the memory block programming mode is disabled.
3	OSB	**Output Stand By Bit:** This bit enables the STo0 - 15 and the STOHZ 0 -15 serial outputs. The following table describes the HiZ control of the serial data outputs:

$\overline{\text{RESET}}$ Pin	ODE Pin	OSB Bit	STo0-15	STOHZ 0-15
0	X	X	HiZ	Driven High
1	0	X	HiZ	Driven High
1	1	0	HiZ	Driven High
1	1	1	Active	Active

Bit	Name	Description
2 - 0	MS2-0	**Memory Select Bit.** These bits are used to select connection memory or data memory:

MS2 - 0	Memory Selection
000	Connection Memory Read/Write
001	Data memory Read
010 - 111	Reserved

Table 15 - Control Register (CR) Bits (continued)

External Read/Write Address: 001_H
Reset Value: 0000_H

15	14	13	12	11	10	9	8	7	6	5	4	3	2	1	0
0	0	0	0	CKINP	FPINP	CK2P	FP2P	CK1P	FP1P	CK0P	FP0P	BPD 2	BPD 1	BPD 0	MBPS

Bit	Name	Description
15 - 12	Unused	**Reserved.** In normal functional mode, these bits MUST be set to zero.
11	CKINP	**ST Bus Clock Input ($\overline{CKi}$) Polarity.** When this bit is low, the $\overline{CKi}$ falling edge aligns with the frame boundary. When this bit is high, the $\overline{CKi}$ rising edge aligns with the frame boundary.
10	FPINP	**Frame Pulse Input ($\overline{FPi}$) Polarity.** When this bit is low, the input frame pulse $\overline{FPi}$ should have the negative frame pulse format. When this bit is high, the input frame pulse $\overline{FPi}$ should have the positive frame pulse format.
9	CK2P	**ST Bus Clock Output ($\overline{CKo2}$) Polarity.** When this bit is low, the output clock $\overline{CKo2}$ falling edge aligns with the frame boundary. When this bit is high, the output clock $\overline{CKo2}$ rising edge aligns with the frame boundary.
8	FP2P	**Frame Pulse Output ($\overline{FPo2}$) Polarity.** When this bit is low, the output frame pulse $\overline{FPo2}$ has the negative frame pulse format. When this bit is high, the output frame pulse $\overline{FPo2}$ has the positive frame pulse format.
7	CK1P	**ST Bus Clock Output ($\overline{CKo1}$) Polarity.** When this bit is low, the output clock $\overline{CKo1}$ falling edge aligns with the frame boundary. When this bit is high, the output clock $\overline{CKo1}$ rising edge aligns with the frame boundary.
6	FP1P	**Frame Pulse Output ($\overline{FPo1}$) Polarity.** When this bit is low, the output frame pulse $\overline{FPo1}$ has the negative frame pulse format. When this bit is high, the output frame pulse $\overline{FPo1}$ has the positive frame pulse format.
5	CK0P	**ST Bus Clock Output ($\overline{CKo0}$) Polarity.** When this bit is low, the output clock $\overline{CKo0}$ falling edge aligns with the frame boundary. When this bit is high, the output clock $\overline{CKo0}$ rising edge aligns with the frame boundary.
4	FP0P	**Frame Pulse Output ($\overline{FPo0}$) Polarity.** When this bit is low, the output frame pulse $\overline{FPo0}$ has the negative frame pulse format. When this bit is high, the output frame pulse $\overline{FPo0}$ has the positive frame pulse format.
3 - 1	BPD2 - 0	**Block Programming Data:** These bits refer to the value to be loaded into the connection memory. Whenever the memory block programming feature is activated. After the MBPE bit in the control register is set to high and the MBPS bit is set to high, the contents of the bits BPD0 to BPD2 are loaded into Bit 0 to Bit 2 of the connection memory. Bit 3 to Bit 11 of the connection memory are zeroed.

Table 16 - Internal Mode Selection (IMS) Register Bits

External Read/Write Address: 001_H
Reset Value: 0000_H

15	14	13	12	11	10	9	8	7	6	5	4	3	2	1	0
0	0	0	0	CKINP	FPINP	CK2P	FP2P	CK1P	FP1P	CK0P	FP0P	BPD 2	BPD 1	BPD 0	MBPS

Bit	Name	Description
0	MBPS	**Memory Block Programming Start:** A zero to one transition of this bit starts the memory block programming function. The MBPS, BPD0 to BPD2 bits in this register must be defined in the same write operation. Once the MBPE bit in the control register is set to high, the device requires 50 µs to complete the block programming. After the programming function has finished, the MBPS bit returns to low indicating the operation is completed. When the MBPS is high, the MBPS or MBPE can be set to low to abort the programming operation. To ensure proper block programming operation, when MBPS is high the BPD0 to BPD2 bits in this register must not be changed. Whenever the microprocessor writes a one to the MBPS bit, the block programming function is started, the user must maintain the same logical value to the other bits in this register to avoid any change in the device setting.

Table 16 - Internal Mode Selection (IMS) Register Bits (continued)

External Read/Write Address: 010_H
Reset Value: 0000_H

15	14	13	12	11	10	9	8	7	6	5	4	3	2	1	0
0	0	0	BR SA3	BR SA2	BR SA1	BR SA0	0	0	BR CA6	BR CA5	BR CA4	BR CA3	BR CA2	BR CA1	BR CA0

Bit	Name	Description
15 - 13 8 - 7	Unused	**Reserved.** In normal functional mode, these bits MUST be set to zero.
12 - 9	BRSA3 - 0	**BER Receive Stream Address Bits:** The binary value of these bits refers to the input stream which receives the BER data.
6 - 0	BRCA6 - 0	**BER Receive Channel Address Bits:** The binary value of these bits refers to the input channel in which the BER data starts to be compared.

Table 17 - BER Start Receiving Register (BSRR) Bits

External Read/Write Address: 011_H
Reset Value: 0000_H

15	14	13	12	11	10	9	8	7	6	5	4	3	2	1	0
0	0	0	0	0	0	0	0	BL7	BL6	BL5	BL4	BL3	BL2	BL1	BL0

Bit	Name	Description
15 - 8	Unused	**Reserved.** In normal functional mode, these bits MUST be set to zero.
7 - 0	BL7 - 0	**BER Length Bits:** The binary value of these bits refers to the number of channels. The maximum numbers of BER channels are 32, 64 and 128 for the data rate of 2.048 Mb/s, 4.096 Mb/s and 8.192 Mb/s modes respectively. The minimum number of BER channel is 1. If these bits are set to zero, no BER test will be performed.

Table 18 - BER Length Register (BLR) Bits

External Read Address: 012_H
Reset Value: 0000_H

15	14	13	12	11	10	9	8	7	6	5	4	3	2	1	0
BC 15	BC 14	BC 13	BC 12	BC 11	BC 10	BC 9	BC 8	BC 7	BC 6	BC 5	BC 4	BC 3	BC 2	BC 1	BC 0

Bit	Name	Description
15 - 0	BC15 - 0	**BER Count Bits:** The binary value of these bits refers to the bit error counts. When it reaches its maximum value of Hex FFFF, the value will not be changed any more

Table 19 - BER Count Register (BCR) Bits

External Read/Write Address: 100_H, 102_H, 104_H, 106_H, 108_H, $10A_H$, $10C_H$, $10E_H$,
Reset Value: 0000_H

	15	14	13	12	11	10	9	8	7	6	5	4	3	2	1	0
SICR0	0	0	0	0	0	0	0	STIN0 QEN3	STIN0 QEN2	STIN0 QEN1	STIN0 QEN0	STIN0 SMP1	STIN0 SMP0	STIN0 DR2	STIN0 DR1	STIN0 DR0
SICR1	0	0	0	0	0	0	0	STIN1 QEN3	STIN1 QEN2	STIN1 QEN1	STIN1 QEN0	STIN1 SMP1	STIN1 SMP0	STIN1 DR2	STIN1 DR1	STIN1 DR0
SICR2	0	0	0	0	0	0	0	STIN2 QEN3	STIN2 QEN2	STIN2 QEN1	STIN2 QEN0	STIN2 SMP1	STIN2 SMP0	STIN2 DR2	STIN2 DR1	STIN2 DR0
SICR3	0	0	0	0	0	0	0	STIN3 QEN3	STIN3 QEN2	STIN3 QEN1	STIN3 QEN0	STIN3 SMP1	STIN3 SMP0	STIN3 DR2	STIN3 DR1	STIN3 DR0
SICR4	0	0	0	0	0	0	0	STIN4 QEN3	STIN4 QEN2	STIN4 QEN1	STIN4 QEN0	STIN4 SMP1	STIN4 SMP0	STIN4 DR2	STIN4 DR1	STIN4 DR0
SICR5	0	0	0	0	0	0	0	STIN5 QEN3	STIN5 QEN2	STIN5 QEN1	STIN5 QEN0	STIN5 SMP1	STIN5 SMP0	STIN5 DR2	STIN5 DR1	STIN5 DR0
SICR6	0	0	0	0	0	0	0	STIN6 QEN3	STIN6 QEN2	STIN6 QEN1	STIN6 QEN0	STIN6 SMP1	STIN6 SMP0	STIN6 DR2	STIN6 DR1	STIN6 DR0
SICR7	0	0	0	0	0	0	0	STIN7 QEN3	STIN7 QEN2	STIN7 QEN1	STIN7 QEN0	STIN7 SMP1	STIN7 SMP0	STIN7 DR2	STIN7 DR1	STIN7 DR0

Bit	Name	Description
15 - 9	Unused	**Reserved.** In normal functional mode, these bits MUST be set to zero.
8	STIN#QEN3	**Quadrant Frame 3 Enable.** When this bit is low, the device is in normal operation mode. When this bit is high, the LSB of every channel in this quadrant frame is replaced by "1". This quadrant frame is defined as Ch24 to 31, Ch48 to 63 and Ch96 to 127 for the 2.048 Mb/s, 4.096 Mb/s and 8.192 Mb/s mode respectively.
7	STIN#QEN2	**Quadrant Frame 2 Enable.** When this bit is low, the device is in normal operation mode. When this bit is high, the LSB of every channel in this quadrant frame is replaced by "1". This quadrant frame is defined as Ch16 to 23, Ch32 to 47 and Ch64 to 95 for the 2.048 Mb/s, 4.096 Mb/s and 8.192 Mb/s mode respectively.
6	STIN#QEN1	**Quadrant Frame 1 Enable.** When this bit is low, the device is in normal operation mode. When this bit is high, the LSB of every channel in this quadrant frame is replaced by "1". This quadrant frame is defined as Ch8 to 15, Ch16 to 31 and Ch32 to 63 for the 2.048 Mb/s, 4.096 Mb/s and 8.192 Mb/s mode respectively.
5	STIN#QEN0	**Quadrant Frame 0 Enable.** When this bit is low, the device is in normal operation mode. When this bit is high, the LSB of every channel in this quadrant frame is replaced by "1". This quadrant frame is defined as Ch0 to 7, Ch0 to 15 and Ch0 to 31 for 2.048 Mb/s, the 4.096 Mb/s and 8.192 Mb/s mode respectively.

Table 20 - Stream Input Control Register 0 to 7 (SICR0 to SICR7)

External Read/Write Address: 100_H, 102_H, 104_H, 106_H, 108_H, $10A_H$, $10C_H$, $10E_H$,
Reset Value: 0000_H

	15	14	13	12	11	10	9	8	7	6	5	4	3	2	1	0
SICR0	0	0	0	0	0	0	0	STIN0 QEN3	STIN0 QEN2	STIN0 QEN1	STIN0 QEN0	STIN0 SMP1	STIN0 SMP0	STIN0 DR2	STIN0 DR1	STIN0 DR0
SICR1	0	0	0	0	0	0	0	STIN1 QEN3	STIN1 QEN2	STIN1 QEN1	STIN1 QEN0	STIN1 SMP1	STIN1 SMP0	STIN1 DR2	STIN1 DR1	STIN1 DR0
SICR2	0	0	0	0	0	0	0	STIN2 QEN3	STIN2 QEN2	STIN2 QEN1	STIN2 QEN0	STIN2 SMP1	STIN2 SMP0	STIN2 DR2	STIN2 DR1	STIN2 DR0
SICR3	0	0	0	0	0	0	0	STIN3 QEN3	STIN3 QEN2	STIN3 QEN1	STIN3 QEN0	STIN3 SMP1	STIN3 SMP0	STIN3 DR2	STIN3 DR1	STIN3 DR0
SICR4	0	0	0	0	0	0	0	STIN4 QEN3	STIN4 QEN2	STIN4 QEN1	STIN4 QEN0	STIN4 SMP1	STIN4 SMP0	STIN4 DR2	STIN4 DR1	STIN4 DR0
SICR5	0	0	0	0	0	0	0	STIN5 QEN3	STIN5 QEN2	STIN5 QEN1	STIN5 QEN0	STIN5 SMP1	STIN5 SMP0	STIN5 DR2	STIN5 DR1	STIN5 DR0
SICR6	0	0	0	0	0	0	0	STIN6 QEN3	STIN6 QEN2	STIN6 QEN1	STIN6 QEN0	STIN6 SMP1	STIN6 SMP0	STIN6 DR2	STIN6 DR1	STIN6 DR0
SICR7	0	0	0	0	0	0	0	STIN7 QEN3	STIN7 QEN2	STIN7 QEN1	STIN7 QEN0	STIN7 SMP1	STIN7 SMP0	STIN7 DR2	STIN7 DR1	STIN7 DR0

Bit	Name	Description
4 - 3	STIN#SMP1 - 0	**Input Data Sampling Point Selection Bits:**

STIN#SMP1-0	Sampling Point
00	3/4 point
01	4/4 point
10	1/4 point
11	2/4 point

Bit	Name	Description
2 - 0	STIN#DR2 - 0	**Input Data Rate Selection Bits:**

STIN#DR2-0	Data Rate
000	Disabled - External pull-up or pull-down is required for ST-BUS input
001	2.048 Mb/s
010	4.096 Mb/s
011	8.192 Mb/s
100 - 111	Reserved

Note: # denotes input stream from 0 to 7

Table 20 - Stream Input Control Register 0 to 7 (SICR0 to SICR7) (continued)

External Read/Write Address: 110_H, 112_H, 114_H, 116_H, 118_H, $11A_H$, $11C_H$, $11E_H$,
Reset Value: 0000_H

	15	14	13	12	11	10	9	8	7	6	5	4	3	2	1	0
SICR8	0	0	0	0	0	0	0	STIN8 QEN3	STIN8 QEN2	STIN8 QEN1	STIN8 QEN0	STIN8 SMP1	STIN8 SMP0	STIN8 DR2	STIN8 DR1	STIN8 DR0
SICR9	0	0	0	0	0	0	0	STIN9 QEN3	STIN9 QEN2	STIN9 QEN1	STIN9 QEN0	STIN9 SMP1	STIN9 SMP0	STIN9 DR2	STIN9 DR1	STIN9 DR0
SICR10	0	0	0	0	0	0	0	STIN10 QEN3	STIN10 QEN2	STIN10 QEN1	STIN10 QEN0	STIN10 SMP1	STIN10 SMP0	STIN10 DR2	STIN10 DR1	STIN10 DR0
SICR11	0	0	0	0	0	0	0	STIN11 QEN3	STIN11 QEN2	STIN11 QEN1	STIN11 QEN0	STIN11 SMP1	STIN11 SMP0	STIN11 DR2	STIN11 DR1	STIN11 DR0
SICR12	0	0	0	0	0	0	0	STIN12 QEN3	STIN12 QEN2	STIN12 QEN1	STIN12 QEN0	STIN12 SMP1	STIN12 SMP0	STIN12 DR2	STIN12 DR1	STIN12 DR0
SICR13	0	0	0	0	0	0	0	STIN13 QEN3	STIN13 QEN2	STIN13 QEN1	STIN13 QEN0	STIN13 SMP1	STIN13 SMP0	STIN13 DR2	STIN13 DR1	STIN13 DR0
SICR14	0	0	0	0	0	0	0	STIN14 QEN3	STIN14 QEN2	STIN14 QEN1	STIN14 QEN0	STIN14 SMP1	STIN14 SMP0	STIN14 DR2	STIN14 DR1	STIN14 DR0
SICR15	0	0	0	0	0	0	0	STIN15 QEN3	STIN15 QEN2	STIN15 QEN1	STIN15 QEN0	STIN15 SMP1	STIN15 SMP0	STIN15 DR2	STIN15 DR1	STIN15 DR0

Bit	Name	Description
15 - 9	Unused	**Reserved.** In normal functional mode, these bits MUST be set to zero.
8	STIN#QEN3	**Quadrant Frame 3 Enable.** When this bit is low, the device is in normal operation mode. When this bit is high, the LSB of every channel in this quadrant frame is replaced by "1". This quadrant frame is defined as Ch24 to 31, Ch48 to 63 and Ch96 to 127 for the 2.048 Mb/s, 4.096 Mb/s and 8.192 Mb/s mode respectively.
7	STIN#QEN2	**Quadrant Frame 2 Enable.** When this bit is low, the device is in normal operation mode. When this bit is high, the LSB of every channel in this quadrant frame is replaced by "1". This quadrant frame is defined as Ch16 to 23, Ch32 to 47 and Ch64 to 95 for the 2.048 Mb/s, 4.096 Mb/s and 8.192 Mb/s mode respectively.
6	STIN#QEN1	**Quadrant Frame 1 Enable.** When this bit is low, the device is in normal operation mode. When this bit is high, the LSB of every channel in this quadrant frame is replaced by "1". This quadrant frame is defined as Ch8 to 15, Ch16 to 31 and Ch32 to 63 for the 2.048 Mb/s, 4.096 Mb/s and 8.192 Mb/s mode respectively.
5	STIN#QEN0	**Quadrant Frame 0 Enable.** When this bit is low, the device is in normal operation mode. When this bit is high, the LSB of every channel in this quadrant frame is replaced by "1". This quadrant frame is defined as Ch0 to 7, Ch0 to 15 and Ch0 to 31 for 2.048 Mb/s, the 4.096 Mb/s and 8.192 Mb/s mode respectively.

Table 21 - Stream Input Control Register 8 to 15 (SICR8 to SICR15)

External Read/Write Address: 110_H, 112_H, 114_H, 116_H, 118_H, $11A_H$, $11C_H$, $11E_H$,
Reset Value: 0000_H

	15	14	13	12	11	10	9	8	7	6	5	4	3	2	1	0
SICR8	0	0	0	0	0	0	0	STIN8 QEN3	STIN8 QEN2	STIN8 QEN1	STIN8 QEN0	STIN8 SMP1	STIN8 SMP0	STIN8 DR2	STIN8 DR1	STIN8 DR0
SICR9	0	0	0	0	0	0	0	STIN9 QEN3	STIN9 QEN2	STIN9 QEN1	STIN9 QEN0	STIN9 SMP1	STIN9 SMP0	STIN9 DR2	STIN9 DR1	STIN9 DR0
SICR10	0	0	0	0	0	0	0	STIN10 QEN3	STIN10 QEN2	STIN10 QEN1	STIN10 QEN0	STIN10 SMP1	STIN10 SMP0	STIN10 DR2	STIN10 DR1	STIN10 DR0
SICR11	0	0	0	0	0	0	0	STIN11 QEN3	STIN11 QEN2	STIN11 QEN1	STIN11 QEN0	STIN11 SMP1	STIN11 SMP0	STIN11 DR2	STIN11 DR1	STIN11 DR0
SICR12	0	0	0	0	0	0	0	STIN12 QEN3	STIN12 QEN2	STIN12 QEN1	STIN12 QEN0	STIN12 SMP1	STIN12 SMP0	STIN12 DR2	STIN12 DR1	STIN12 DR0
SICR13	0	0	0	0	0	0	0	STIN13 QEN3	STIN13 QEN2	STIN13 QEN1	STIN13 QEN0	STIN13 SMP1	STIN13 SMP0	STIN13 DR2	STIN13 DR1	STIN13 DR0
SICR14	0	0	0	0	0	0	0	STIN14 QEN3	STIN14 QEN2	STIN14 QEN1	STIN14 QEN0	STIN14 SMP1	STIN14 SMP0	STIN14 DR2	STIN14 DR1	STIN14 DR0
SICR15	0	0	0	0	0	0	0	STIN15 QEN3	STIN15 QEN2	STIN15 QEN1	STIN15 QEN0	STIN15 SMP1	STIN15 SMP0	STIN15 DR2	STIN15 DR1	STIN15 DR0

Bit	Name	Description
4 - 3	STIN#SMP1 - 0	**Input Data Sampling Point Selection Bits:**
2 - 0	STIN#DR2 - 0	**Input Data Rate Selection Bits:**

STIN#SMP1-0	Sampling Point
00	3/4 point
01	4/4 point
10	1/4 point
11	2/4 point

STIN#DR2-0	Data Rate
000	Disabled - External pull-up or pull-down is required for ST-BUS input
001	2.048 Mb/s
010	4.096 Mb/s
011	8.192 Mb/s
100 - 111	Reserved

Note: # denotes input stream from 8 to 15

Table 21 - Stream Input Control Register 8 to 15 (SICR8 to SICR15) (continued)

External Read/Write Address: 101_H, 103_H, 105_H, 107_H, 109_H, $10B_H$, $10D_H$, $10F_H$,
Reset Value: 0000_H

	15	14	13	12	11	10	9	8	7	6	5	4	3	2	1	0
SIDR0	0	0	0	0	0	0	STIN0 CD6	STIN0 CD5	STIN0 CD4	STIN0 CD3	STIN0 CD2	STIN0 CD1	STIN0 CD0	STIN0 BD2	STIN0 BD1	STIN0 BD0
SIDR1	0	0	0	0	0	0	STIN1 CD6	STIN1 CD5	STIN1 CD4	STIN1 CD3	STIN1 CD2	STIN1 CD1	STIN1 CD0	STIN1 BD2	STIN1 BD1	STIN1 BD0
SIDR2	0	0	0	0	0	0	STIN2 CD6	STIN2 CD5	STIN2 CD4	STIN2 CD3	STIN2 CD2	STIN2 CD1	STIN2 CD0	STIN2 BD2	STIN2 BD1	STIN2 BD0
SIDR3	0	0	0	0	0	0	STIN3 CD6	STIN3 CD5	STIN3 CD4	STIN3 CD3	STIN3 CD2	STIN3 CD1	STIN3 CD0	STIN3 BD2	STIN3 BD1	STIN3 BD0
SIDR4	0	0	0	0	0	0	STIN4 CD6	STIN4 CD5	STIN4 CD4	STIN4 CD3	STIN4 CD2	STIN4 CD1	STIN4 CD0	STIN4 BD2	STIN4 BD1	STIN4 BD0
SIDR5	0	0	0	0	0	0	STIN5 CD6	STIN5 CD5	STIN5 CD4	STIN5 CD3	STIN5 CD2	STIN5 CD1	STIN5 CD0	STIN5 BD2	STIN5 BD1	STIN5 BD0
SIDR6	0	0	0	0	0	0	STIN6 CD6	STIN6 CD5	STIN6 CD4	STIN6 CD3	STIN6 CD2	STIN6 CD1	STIN6 CD0	STIN6 BD2	STIN6 BD1	STIN6 BD0
SIDR7	0	0	0	0	0	0	STIN7 CD6	STIN7 CD5	STIN7 CD4	STIN7 CD3	STIN7 CD2	STIN7 CD1	STIN7 CD0	STIN7 BD2	STIN7 BD1	STIN7 BD0

Bit	Name	Description
15 - 10	Unused	**Reserved.** In normal functional mode, these bits MUST be set to zero.
9 - 3	STIN#CD6 - 0	**Input Stream# Channel Delay Bits:** The binary value of these bits refers to the number of channels that the input stream will be delayed. This value should not exceed the maximum channel number of the stream. Zero means no delay.
2 - 0	STIN#BD2 - 0	**Input Stream# Bit Delay Bits:** The binary value of these bits refers to the number of bits that the input stream will be delayed. This maximum value is 7. Zero means no delay.

Note: # denotes input stream from 0 to 7

Table 22 - Stream Input Delay Register 0 to 7 (SIDR0 to SIDR7)

External Read/Write Address: 111_H, 113_H, 115_H, 117_H, 119_H, $11B_H$, $11D_H$, $11F_H$,
Reset Value: 0000_H

	15	14	13	12	11	10	9	8	7	6	5	4	3	2	1	0
SIDR8	0	0	0	0	0	0	STIN8 CD6	STIN8 CD5	STIN8 CD4	STIN8 CD3	STIN8 CD2	STIN8 CD1	STIN8 CD0	STIN8B BD2	STIN8B BD1	STIN8B BD0
SIDR9	0	0	0	0	0	0	STIN9 CD6	STIN9 CD5	STIN9 CD4	STIN9 CD3	STIN9 CD2	STIN9 CD1	STIN9 CD0	STIN9B BD2	STIN9B BD1	STIN9B BD0
SIDR10	0	0	0	0	0	0	STIN10 CD6	STIN10 CD5	STIN10 CD4	STIN10 CD3	STIN10 CD2	STIN10 CD1	STIN10 CD0	STIN10 BD2	STIN10 BD1	STIN10 BD0
SIDR11	0	0	0	0	0	0	STIN11 CD6	STIN11 CD5	STIN11 CD4	STIN11 CD3	STIN11 CD2	STIN11 CD1	STIN11 CD0	STIN11 BD2	STIN11 BD1	STIN11 BD0
SIDR12	0	0	0	0	0	0	STIN12 CD6	STIN12 CD5	STIN12 CD4	STIN12 CD3	STIN12 CD2	STIN12 CD1	STIN12 CD0	STIN12 BD2	STIN12 BD1	STIN12 BD0
SIDR13	0	0	0	0	0	0	STIN13 CD6	STIN13 CD5	STIN13 CD4	STIN13 CD3	STIN13 CD2	STIN13 CD1	STIN13 CD0	STIN13 BD2	STIN13 BD1	STIN13 BD0
SIDR14	0	0	0	0	0	0	STIN14 CD6	STIN14 CD5	STIN14 CD4	STIN14 CD3	STIN14 CD2	STIN14 CD1	STIN14 CD0	STIN14 BD2	STIN14 BD1	STIN14 BD0
SIDR15	0	0	0	0	0	0	STIN15 CD6	STIN15 CD5	STIN15 CD4	STIN15 CD3	STIN15 CD2	STIN15 CD1	STIN15 CD0	STIN15 BD2	STIN15 BD1	STIN15 BD0

Bit	Name	Description
15 - 10	Unused	**Reserved.** In normal functional mode, these bits MUST be set to zero.
9 - 3	STIN#CD6 - 0	**Input Stream# Channel Delay Bits:** The binary value of these bits refers to the number of channels that the input stream will be delayed. This value should not exceed the maximum channel number of the stream. Zero means no delay.
2 - 0	STIN#BD2 - 0	**Input Stream# Bit Delay Bits:** The binary value of these bits refers to the number of bits that the input stream will be delayed. This maximum value is 7. Zero means no delay.

Note: # denotes input stream from 8 to 15

Table 23 - Stream Input Delay Register 8 to 15 (SIDR8 to SIDR15)

External Read/Write Address: 200_H, 202_H, 204_H, 206_H, 208_H, $20A_H$, $20C_H$, $20E_H$,
Reset Value: 0000_H

	15	14	13	12	11	10	9	8	7	6	5	4	3	2	1	0
SOCR0	0	0	0	0	0	0	0	0	0	STOHZ0 AC	STOHZ0 A2	STOHZ0 A1	STOHZ0 A0	STO0 DR2	STO0 DR1	STO0 DR0
SOCR1	0	0	0	0	0	0	0	0	0	STOHZ1 AC	STOHZ1 A2	STOHZ1 A1	STOHZ1 A0	STO1 DR2	STO1 DR1	STO1 DR0
SOCR2	0	0	0	0	0	0	0	0	0	STOHZ2 AC	STOHZ2 A2	STOHZ2 A1	STOHZ2 A0	STO2 DR2	STO2 DR1	STO2 DR0
SOCR3	0	0	0	0	0	0	0	0	0	STOHZ3 AC	STOHZ3 A2	STOHZ3 A1	STOHZ3 A0	STO3 DR2	STO3 DR1	STO3 DR0
SOCR4	0	0	0	0	0	0	0	0	0	STOHZ4 AC	STOHZ4 A2	STOHZ4 A1	STOHZ4 A0	STO4 DR2	STO4 DR1	STO4 DR0
SOCR5	0	0	0	0	0	0	0	0	0	STOHZ5 AC	STOHZ5 A2	STOHZ5 A1	STOHZ5 A0	STO5 DR2	STO5 DR1	STO5 DR0
SOCR6	0	0	0	0	0	0	0	0	0	STOHZ6 AC	STOHZ6 A2	STOHZ6 A1	STOHZ6 A0	STO6 DR2	STO6 DR1	STO6 DR0
SOCR7	0	0	0	0	0	0	0	0	0	STOHZ7 AC	STOHZ7 A2	STOHZ7 A1	STOHZ7 A0	STO7 DR2	STO7 DR1	STO7 DR0

Bit	Name	Description
15 - 7	Unused	**Reserved.** In normal functional mode, these bits MUST be set to zero.
6	STOHZ#AC	**STOHZ Advancement Control.** When this bit is low, the advancement unit is 15.2ns. When this bit is high, the advancement unit is 1/4 bit.
5 - 3	STOHZ#A2 - 0	**STOHZ Additional Advancement Bits:**

STOHZ#A2-0	Additional Advancement (STOHZ#AC = 0)	Additional Advancement (STOHZ#AC = 1)
000	0.0 ns	0 bit
001	15.2 ns	1/4 bit
010	30.5 ns	1/2 bit
011	45.7 ns	3/4 bit
100	61.0 ns	4/4 bit
101-111	Reserved	Reserved

2 - 0	STO#DR2 - 0	**Output Data Rate Selection Bits:**

STO#DR2-0	Output Data Rate
000	STo HiZ STOHZ driven high
001	2.048 Mb/s
010	4.096 Mb/s
011	8.192 Mb/s
100 - 111	Reserved

Note: # denotes input stream from 0 to 7

Table 24 - Stream Output Control Register 0 to 7 (SOCR0 to SOCR7)

External Read/Write Address: 210_H, 212_H, 214_H, 216_H, 218_H, $21A_H$, $21C_H$, $21E_H$,
Reset Value: 0000_H

	15	14	13	12	11	10	9	8	7	6	5	4	3	2	1	0
SOCR8	0	0	0	0	0	0	0	0	0	STOHZ8 AC	STOHZ8 A2	STOHZ8 A1	STOHZ8 A0	STO8 DR2	STO8 DR1	STO8 DR0
SOCR9	0	0	0	0	0	0	0	0	0	STOHZ9 AC	STOHZ9 A2	STOHZ9 A1	STOHZ9 A0	STO9 DR2	STO9 DR1	STO9 DR0
SOCR10	0	0	0	0	0	0	0	0	0	STOHZ10 AC	STOHZ10 A2	STOHZ10 A1	STOHZ10 A0	STO10 DR2	STO10 DR1	STO10 DR0
SOCR11	0	0	0	0	0	0	0	0	0	STOHZ11 AC	STOHZ11 A2	STOHZ11 A1	STOHZ11 A0	STO11 DR2	STO11 DR1	STO11 DR0
SOCR12	0	0	0	0	0	0	0	0	0	STOHZ12 AC	STOHZ12 A2	STOHZ12 A1	STOHZ12 A0	STO12 DR2	STO12 DR1	STO12 DR0
SOCR13	0	0	0	0	0	0	0	0	0	STOHZ13 AC	STOHZ13 A2	STOHZ13 A1	STOHZ13 A0	STO13 DR2	STO13 DR1	STO13 DR0
SOCR14	0	0	0	0	0	0	0	0	0	STOHZ14 AC	STOHZ14 A2	STOHZ14 A1	STOHZ14 A0	STO14 DR2	STO14 DR1	STO14 DR0
SOCR15	0	0	0	0	0	0	0	0	0	STOHZ15 AC	STOHZ15 A2	STOHZ15 A1	STOHZ15 A0	STO15 DR2	STO15 DR1	STO15 DR0

Bit	Name	Description
15 - 7	Unused	**Reserved.** In normal functional mode, these bits MUST be set to zero.
6	STOHZ#AC	**STOHZ Advancement Control.** When this bit is low, the advancement unit is 15.2 ns. When this bit is high, the advancement unit is 1/4 bit.
5 - 3	STOHZ#A2 - 0	**STOHZ Additional Advancement Bits:**

STOHZ#A2-0	Additional Advancement (STOHZ#AC = 0)	Additional Advancement (STOHZ#AC = 1)
000	0.0 ns	0 bit
001	15.2 ns	1/4 bit
010	30.5 ns	1/2 bit
011	45.7 ns	3/4 bit
100	61.0 ns	4/4 bit
101-111	Reserved	Reserved

2 - 0	STO#DR2 - 0	**Output Data Rate Selection Bits:**

STO#DR2-0	Output Data Rate
000	STo HiZ STOHZ driven high
001	2.048 Mb/s
010	4.096 Mb/s
011	8.192 Mb/s
100 - 111	Reserved

Note: # denotes input stream from 8 to 15

Table 25 - Stream Output Control Register 8 to 15 (SOCR8 to SOCR15)

External Read/Write Address: 201_H, 203_H, 205_H, 207_H, 209_H, $20B_H$, $20D_H$, $20F_H$,
Reset Value: 0000_H

	15	14	13	12	11	10	9	8	7	6	5	4	3	2	1	0
SOOR0	0	0	0	0	STO0 CD6	STO0 CD5	STO0 CD4	STO0 CD3	STO0 CD2	STO0 CD1	STO0 CD0	STO0 BD2	STO0 BD1	STO0 BD0	STO0 FA1	STO0 FA0
SOOR1	0	0	0	0	STO1 CD6	STO1 CD5	STO1 CD4	STO1 CD3	STO1 CD2	STO1 CD1	STO1 CD0	STO1 BD2	STO1 BD1	STO1 BD0	STO1 FA1	STO1 FA0
SOOR2	0	0	0	0	STO2 CD6	STO2 CD5	STO2 CD4	STO2 CD3	STO2 CD2	STO2 CD1	STO2 CD0	STO2 BD2	STO2 BD1	STO2 BD0	STO2 FA1	STO2 FA0
SOOR3	0	0	0	0	STO3 CD6	STO3 CD5	STO3 CD4	STO3 CD3	STO3 CD2	STO3 CD1	STO3 CD0	STO3 BD2	STO3 BD1	STO3 BD0	STO3 FA1	STO3 FA0
SOOR4	0	0	0	0	STO4 CD6	STO4 CD5	STO4 CD4	STO4 CD3	STO4 CD2	STO4 CD1	STO4 CD0	STO4 BD2	STO4 BD1	STO4 BD0	STO4 FA1	STO4 FA0
SOOR5	0	0	0	0	STO5 CD6	STO5 CD5	STO5 CD4	STO5 CD3	STO5 CD2	STO5 CD1	STO5 CD0	STO5 BD2	STO5 BD1	STO5 BD0	STO5 FA1	STO5 FA0
SOOR6	0	0	0	0	STO6 CD6	STO6 CD5	STO6 CD4	STO6 CD3	STO6 CD2	STO6 CD1	STO6 CD0	STO6 BD2	STO6 BD1	STO6 BD0	STO6 FA1	STO6 FA0
SOOR7	0	0	0	0	STO7 CD6	STO7 CD5	STO7 CD4	STO7 CD3	STO7 CD2	STO7 CD1	STO7 CD0	STO7 BD2	STO7 BD1	STO7 BD0	STO7 FA1	STO7 FA0

Bit	Name	Description
15 - 12	Unused	**Reserved.**
11 - 5	STO#CD6-0	**Output Stream# Channel Delay Bits:** The binary value of these bits refers to the number of channels that the output stream is to be delayed. This value should not exceed the maximum channel number of the stream. Zero means no delay.
4 - 2	STO#BD2-0	**Output Stream# Bit Delay Selection Bits:** The binary value of these bits refers to the number of bits that the output stream is to be delayed. The maximum value is 7. Zero means no delay.
1 - 0	STO#FA1-0	**Output Stream# Fractional Advancement Bits** STO#FA1-0 / Advanced By 00 / 0 01 / 1/4 bit 10 / 2/4 bit 11 / 3/4 bit

Note: # denotes input stream from 0 to 7

Table 26 - Stream Output Offset Register 0 to 7 (SOOR0 to SOOR7)

External Read/Write Address: 211_H, 213_H, 215_H, 217_H, 219_H, $21B_H$, $21D_H$, $21F_H$,
Reset Value: 0000_H

	15	14	13	12	11	10	9	8	7	6	5	4	3	2	1	0
SOOR8	0	0	0	0	STO8C D6	STO8 CD5	STO8 CD4	STO8 CD3	STO8 CD2	STO8 CD1	STO8 CD0	STO8B BD2	STO8 BD1	STO8 BD0	STO8 FA1	STO8 FA0
SOOR9	0	0	0	0	STO9C D6	STO9 CD5	STO9 CD4	STO9 CD3	STO9 CD2	STO9 CD1	STO9 CD0	STO9 BD2	STO9 BD1	STO9 BD0	STO9 FA1	STO9 FA0
SOOR10	0	0	0	0	STO10 CD6	STO10 CD5	STO10 CD4	STO10 CD3	STO10 CD2	STO10 CD1	STO10 CD0	STO10 BD2	STO10 BD1	STO10 BD0	STO10 FA1	STO10 FA0
SOOR11	0	0	0	0	STO11 CD6	STO11 CD5	STO11 CD4	STO11 CD3	STO11 CD2	STO11 CD1	STO11 CD0	STO11 BD2	STO11 BD1	STO11 BD0	STO11 FA1	STO11 FA0
SOOR12	0	0	0	0	STO12 CD6	STO12 CD5	STO12 CD4	STO12 CD3	STO12 CD2	STO12 CD1	STO12 CD0	STO12 BD2	STO12 BD1	STO12 BD0	STO12 FA1	STO12 FA0
SOOR13	0	0	0	0	STO13 CD6	STO13 CD5	STO13 CD4	STO13 CD3	STO13 CD2	STO13 CD1	STO13 CD0	STO13 BD2	STO13 BD1	STO13 BD0	STO13 FA1	STO13 FA0
SOOR14	0	0	0	0	STO14 CD6	STO14 CD5	STO14 CD4	STO14 CD3	STO14 CD2	STO14 CD1	STO14 CD0	STO14 BD2	STO14 BD1	STO14 BD0	STO14 FA1	STO14 FA0
SOOR15	0	0	0	0	STO15 CD6	STO15 CD5	STO1 CD4	STO15 CD3	STO15 CD2	STO15 CD1	STO15 CD0	STO15 BD2	STO15 BD1	STO15 BD0	STO15 FA1	STO15 FA0

Bit	Name	Description
15 - 12	Unused	**Reserved.**
11 - 5	STO#CD6-0	**Output Stream# Channel Delay Bits:** The binary value of these bits refers to the number of channels that the output stream is to be delayed. This value should not exceed the maximum channel number of the stream. Zero means no delay.
4 - 2	STO#BD2-0	**Output Stream# Bit Delay Selection Bits:** The binary value of these bits refers to the number of bits that the output stream is to be delayed. The maximum value is 7. Zero means no delay.
1 - 0	STO#FA1-0	**Output Stream# Fractional Advancement Bits** STO#FA1-0 — Advanced By 00 — 0 01 — 1/4 bit 10 — 2/4 bit 11 — 3/4 bit

Note: # denotes input stream from 8 to 15

Table 27 - Stream Output Offset Register 8 to 15 (SOOR8 to SOOR15)

7.0 Memory Address Mappings

When A11 is high, the data or the connection memory can be accessed by the microprocessor port. The Bit 0 to Bit 2 in the control register determine the access to the data or connection memory

MSB (Note 1)	**Stream Address (ST. 0-15)**					**Channel Address (Ch 0-127)**							
External Address (A11)	**A10**	**A9**	**A8**	**A7**	**Stream #**	**A6**	**A5**	**A4**	**A3**	**A2**	**A1**	**A0**	**Channel #**
1	0	0	0	0	Stream 0	0	0	0	0	0	0	0	Ch 0
1	0	0	0	1	Stream 1	0	0	0	0	0	0	1	Ch 1
1	0	0	1	0	Stream 2	.	.	.	.	.	.	.	.
1	0	0	1	1	Stream 3	.	.	.	.	.	.	.	.
1	0	1	0	0	Stream 4	0	0	1	1	1	1	0	Ch 30
1	0	1	0	1	Stream 5	0	0	1	1	1	1	1	Ch 31 (Note 2)
1	0	1	1	0	Stream 6	0	1	0	0	0	0	0	Ch 32
1	0	1	1	1	Stream 7	0	1	0	0	0	0	1	Ch 33
1	0	1	0	0	Stream 8	.	.	.	.	.	.	.	.
.	.	.	.	.	.	.	.	.	.	.	.	.	.
.	.	.	.	.	.	0	1	1	1	1	1	0	Ch 62
.	.	.	.	.	.	0	1	1	1	1	1	1	Ch 63 (Note 3)
.	.	.	.	.	.	.	.	.	.	.	.	.	.
.	.	.	.	.	.	.	.	.	.	.	.	.	.
1	1	1	1	0	Stream 14	1	1	1	1	1	1	0	Ch 126
1	1	1	1	1	Stream 15	1	1	1	1	1	1	1	Ch 127 (Note 4)

Notes:
1. MSB of address must be high for access to data and connection memory positions. MSB must be low for access to registers.
2. Channels 0 to 31 are used when serial stream is at 2.048 Mb/s.
3. Channels 0 to 63 are used when serial stream is at 4.096 Mb/s.
4. Channels 0 to 127 are used when serial stream is at 8.192 Mb/s.

Table 28 - Address Map for Memory Locations (512 x 512 DX, MSB of address = 1)

8.0 Connection Memory Bit Assignment

When the CMM bit (Bit0) is zero, the connection is in normal switching mode. When the CMM bit is one, the connection memory is in special transmission mode.

11	10	9	8	7	6	5	4	3	2	1	0
SSA3	SSA2	SSA1	SSA0	SCA6	SCA5	SCA4	SCA3	SCA2	SCA1	SCA0	**CMM =0**

Bit	Name	Description
11 - 8	SSA3-0	**Source Stream Address.** The binary value of these 4 bits represents the input stream number.
7 - 1	SCA6-0	**Source Channel Address.** The binary value of these 7 bits represents the input channel number.
0	CMM=0	**Connection Memory Mode = 0.** If this bit is set low, the connection memory is in normal switching mode. Bit 1 to 11 represent the source stream number and channel number.

Table 29 - Connection Memory Bit Assignment when the CMM bit = 0

11	10	9	8	7	6	5	4	3	2	1	0
0	MSG7	MSG6	MSG5	MSG4	MSG3	MSG2	MSG1	MSG0	PCC1	PCC0	**CMM =1**

Bit	Name	Description
11	Unused	**Reserved.**
10 - 3	MSG7-0	**Message Data Bits:** 8-bit data for the message mode.
2 - 1	PCC1-0	**Per-Channel Control Bits:** These two bits control outputs**.** PCC / PCC0 / Output 0 / 0 / Per Channel Tristate 0 / 1 / Message Mode 1 / 0 / BER Test Mode 1 / 1 / Reserved
0	CMM=1	**Connection Memory Mode = 1.** If this bit is set high, the connection memory is in the per-channel control mode which is per-channel tristate, per-channel message mode or per-channel BER mode.

Table 30 - Connection Memory Bits Assignment when the CMM bit = 1

Absolute Maximum Ratings*

	Parameter	Symbol	Min.	Max	Units
1	I/O Supply Voltage	V_{DD}	-0.5	5.0	V
2	Input Voltage	V_{I_3V}	-0.5	V_{DD} + 0.5	V
3	Input Voltage (5 V tolerant inputs)	V_{I_5V}	-0.5	7.0	V
4	Continuous Current at digital outputs	I_o		15	mA
5	Package power dissipation	P_D		0.75	W
6	Storage temperature	T_S	- 55	+125	°C

* Exceeding these values may cause permanent damage. Functional operation under these conditions is not implied.

Recommended Operating Conditions - Voltages are with respect to ground (V_{SS}) unless otherwise stated.

	Characteristics	Sym.	Min.	Typ.‡	Max	Units
1	Operating Temperature	T_{OP}	-40	25	+85	°C
2	Positive Supply	V_{DD}	3.0	3.3	3.6	V
3	Input Voltage	V_I	0		V_{DD}	V
4	Input Voltage on 5 V Tolerant Inputs	V_{I_5V}	0		5.5	V

‡ Typical figures are at 25°C and are for design aid only: not guaranteed and not subject to production testing.

DC Electrical Characteristics† - Voltages are with respect to ground (V_{SS}) unless otherwise stated.

	Characteristics	Sym.	Min.	Typ‡	Max	Units	Test Conditions
1	Supply Current	I_{DD}			250	mA	Output unloaded
2	Input High Voltage	V_{IH}	2.0			V	
3	Input Low Voltage	V_{IL}			0.8	V	
4	Input Leakage (input pins) Input Leakage (bi-directional pins)	I_{IL} I_{BL}			5 5	µA µA	$0 \le < V_{IN} \le V_{DD_IO}$ See Note 1
5	Weak Pullup Current	I_{PU}		-33		µA	Input at 0 V
6	Weak Pulldown Current	I_{PD}		33		µA	Input at V_{DD_IO}
7	Input Pin Capacitance	C_I		3		pF	
8	Output High Voltage	V_{OH}	2.4			V	I_{OH} = 10mA
9	Output Low Voltage	V_{OL}			0.4	V	I_{OL} = 10mA
10	Output High Impedance Leakage	I_{OZ}			5	µA	$0 < V < V_{DD}$
11	Output Pin Capacitance	C_O		5	10	pF	

† Characteristics are over recommended operating conditions unless otherwise stated.

‡ Typical figures are at 25°C, V_{DD} at 3.3 V and are for design aid only: not guaranteed and not subject to production testing.

* Note 1: Maximum leakage on pins (output or I/O pins in high impedance state) is over an applied voltage (V_{IN}).

AC Electrical Characteristics† - Timing Parameter Measurement Voltage Levels

	Characteristics	Sym.	Level	Units	Conditions
1	CMOS Threshold	V_{CT}	$0.5V_{DD_IO}$	V	
2	Rise/Fall Threshold Voltage High	V_{HM}	$0.7V_{DD_IO}$	V	
3	Rise/Fall Threshold Voltage Low	V_{LM}	$0.3V_{DD_IO}$	V	

† Characteristics are over recommended operating conditions unless otherwise stated.

AC Electrical Characteristics† - $\overline{FPi}$ and $\overline{CKi}$ Timing when CKIN2 to 0 bits = 000

	Characteristic	Sym.	Min.	Typ.‡	Max.	Units	Notes
1	$\overline{FPi}$ Input Frame Pulse Width	t_{FPIW}	40	61	115	ns	
2	$\overline{FPi}$ Input Frame Pulse Setup Time	t_{FPIS}	20		40	ns	
3	$\overline{FPi}$ Input Frame Pulse Hold Time	t_{FPIH}	20		40	ns	
4	$\overline{CKi}$ Input Clock Period	t_{CKIP}	55	61	67	ns	
5	$\overline{CKi}$ Input Clock High Time	t_{CKIH}	27		33	ns	
6	$\overline{CKi}$ Input Clock Low Time	t_{CKIL}	27		33	ns	
7	$\overline{CKi}$ Input Clock Rise/Fall Time	t_{rCKi}, t_{fCKi}	0		3	ns	

† Characteristics are over recommended operating conditions unless otherwise stated.

‡ Typical figures are at 25°C, V_{DD} at 3.3 V and are for design aid only: not guaranteed and not subject to production testing.

AC Electrical Characteristics† - $\overline{FPi}$ and $\overline{CKi}$ Timing when CKIN2 to 0 bits = 001

	Characteristic	Sym.	Min.	Typ.‡	Max.	Units	Notes
1	$\overline{FPi}$ Input Frame Pulse Width	t_{FPIW}	90	122	220	ns	
2	$\overline{FPi}$ Input Frame Pulse Setup Time	t_{FPIS}	45		90	ns	
3	$\overline{FPi}$ Input Frame Pulse Hold Time	t_{FPIH}	45		90	ns	
4	$\overline{CKi}$ Input Clock Period	t_{CKIP}	110	122	135	ns	
5	$\overline{CKi}$ Input Clock High Time	t_{CKIH}	63		69	ns	
6	$\overline{CKi}$ Input Clock Low Time	t_{CKIL}	63		69	ns	
7	$\overline{CKi}$ Input Clock Rise/Fall Time	t_{rCKi}, t_{fCKi}	0		3	ns	

† Characteristics are over recommended operating conditions unless otherwise stated.

‡ Typical figures are at 25°C, V_{DD} at 3.3 V and3 are for design aid only: not guaranteed and not subject to production testing.

AC Electrical Characteristics - $\overline{FPi}$ and $\overline{CKi}$ Timing when CKIN2 to 0 bits = 010

	Characteristic	Sym.	Min.	Typ.‡	Max.	Units	Notes
1	$\overline{FPi}$ Input Frame Pulse Width	t_{FPIW}	90	244	420	ns	
2	$\overline{FPi}$ Input Frame Pulse Setup Time	t_{FPIS}	110		135	ns	
3	$\overline{FPi}$ Input Frame Pulse Hold Time	t_{FPIH}	120		145	ns	
4	$\overline{CKi}$ Input Clock Period	t_{CKIP}	220	244	270	ns	
5	$\overline{CKi}$ Input Clock High Time	t_{CKIH}	110		135	ns	
6	$\overline{CKi}$ Input Clock Low Time	t_{CKIL}	110		135	ns	
7	$\overline{CKi}$ Input Clock Rise/Fall Time	t_{rCKi}, t_{fCKi}	0		3	ns	

† Characteristics are over recommended operating conditions unless otherwise stated.

‡ Typical figures are at 25°C, V_{DD} at 3.3 V and are for design aid only: not guaranteed and not subject to production testing.

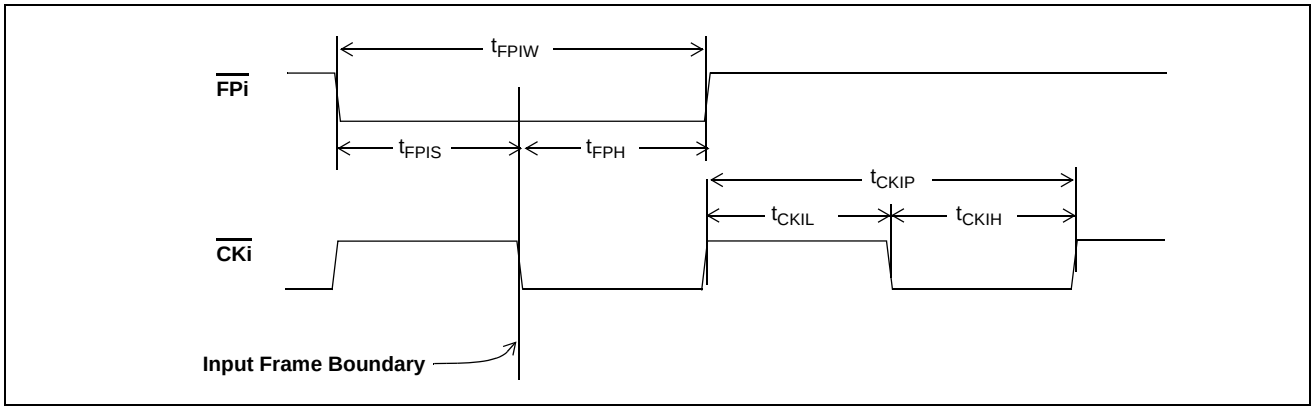

Figure 25 - Frame Pulse Input and Clock Input Timing Diagram

AC Electrical Characteristics† - Frame Boundary Timing with Input Clock Cycle-to-cycle Variation

	Characteristic	Sym.	Min.	Typ‡	Max.	Units	Notes
1	CKi Input Clock cycle-to-cycle variation	t_{CKV}	0		50	ns	

† Characteristics are over recommended operating conditions unless otherwise stated.

‡ Typical figures are at 25°C, V_{DD} at 3.3 V and are for design aid only: not guaranteed and not subject to production testing.

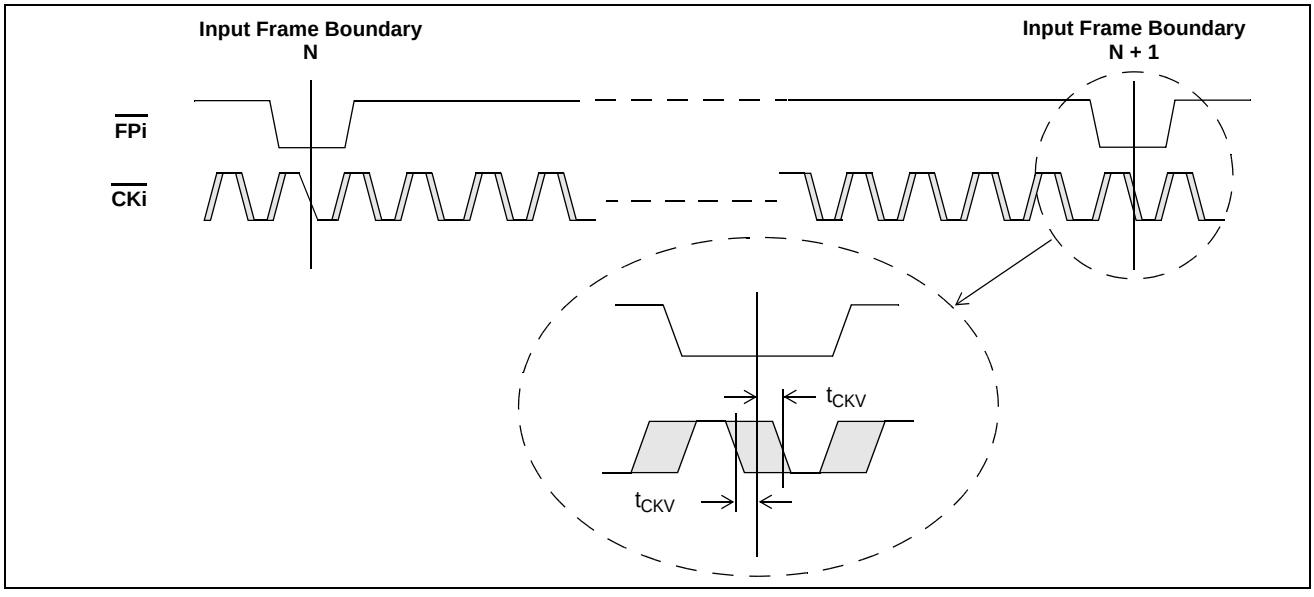

Figure 26 - Frame Boundary Timing with Input Clock (cycle-to-cycle) Variation

AC Electrical Characteristics† - Frame Boundary Timing with Input Frame Pulse Cycle-to-cycle Variation

	Characteristic	Sym.	Min.	Typ.‡	Max.	Units	Notes
1	FPi Input Frame Pulse cycle-to-cycle variation	t_{FPV}	0		50	ns	

† Characteristics are over recommended operating conditions unless otherwise stated.

‡ Typical figures are at 25°C, V_{DD} at 3.3 V and are for design aid only: not guaranteed and not subject to production testing.

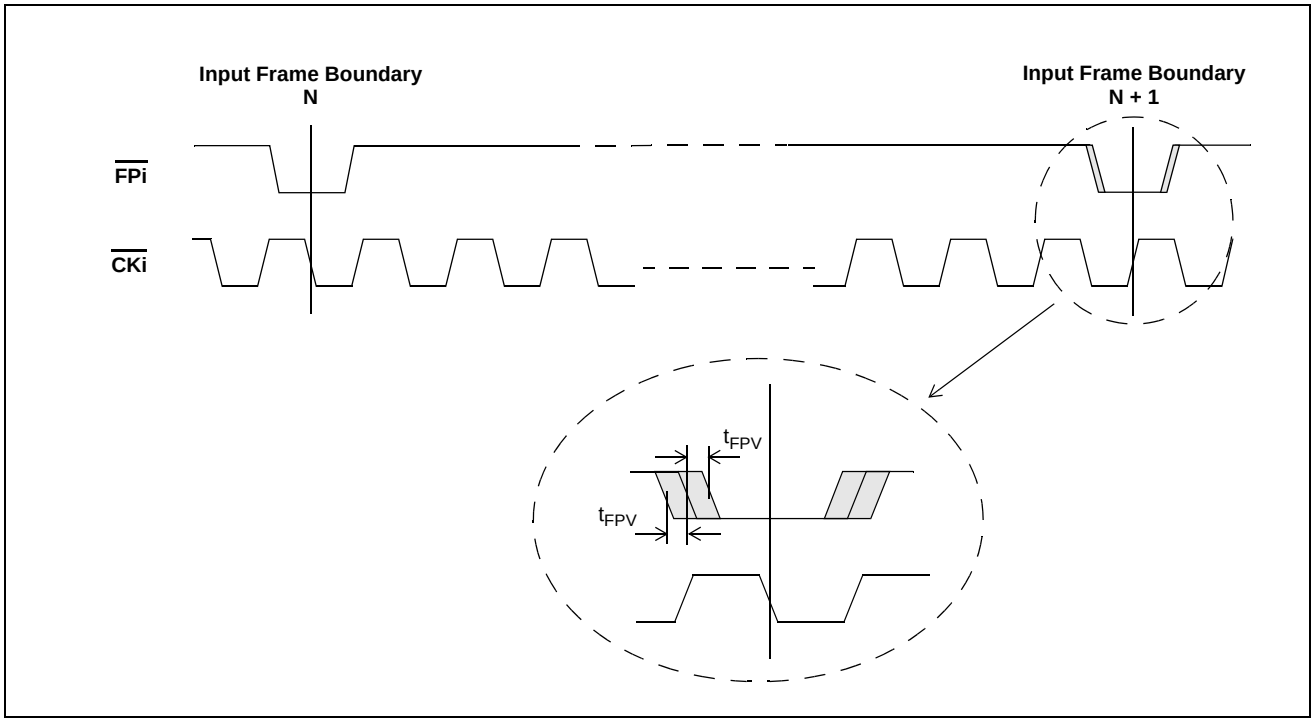

Figure 27 - Frame Boundary Timing with Input Frame Pulse (cycle-to-cycle) Variation

AC Electrical Characteristics - Input and Output Frame Boundary Alignment

	Characteristic	Sym.	Min.	Typ.	Max.	Units	Notes
2	Input and Output Frame Offset	t_{FBOS}	1		18	ns	Measured when there is no jitter on the $\overline{CKi}$ and $\overline{FPi}$ inputs.

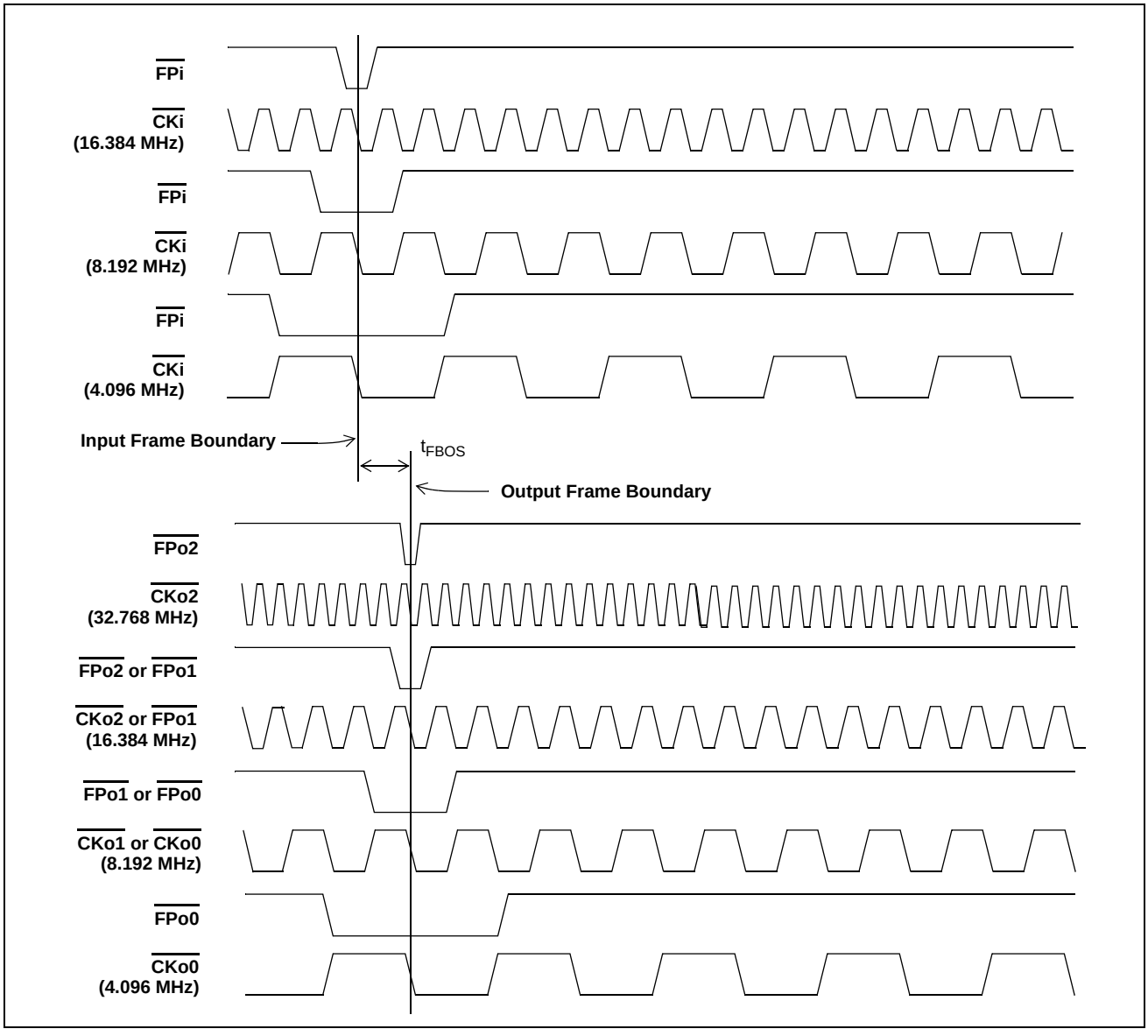

Figure 28 - Input and Output Frame Boundary Offset

AC Electrical Characteristics† - $\overline{\text{FPo0}}$ and $\overline{\text{CKo0}}$ Timing when CKFP0 = 0

	Characteristic	Sym.	Min.	Typ.‡	Max.	Units	Notes
1	$\overline{\text{FPo0}}$ Output Pulse Width	t_{FPW0}	220	244	270	ns	C_L=30pF
2	$\overline{\text{FPo0}}$ Output Delay from the $\overline{\text{CKo0}}$ falling edge to the output frame boundary	t_{FODF0}	115		130	ns	
3	$\overline{\text{FPo0}}$ Output Delay from the output frame boundary to the $\overline{\text{CKo0}}$ Rising edge	t_{FODR0}	115		130	ns	
4	$\overline{\text{CKo0}}$ Output Clock Period	t_{CKP0}	220	244	270	ns	C_L=30pF
5	$\overline{\text{CKo0}}$ Output High Time	t_{CKH0}	115		130	ns	
6	$\overline{\text{CKo0}}$ Output Low Time	t_{CKL0}	115		130	ns	
7	$\overline{\text{CKo0}}$ Output Rise/Fall Time	t_{rCK0}, t_{fCK0}			10	ns	

† Characteristics are over recommended operating conditions unless otherwise stated.

‡ Typical figures are at 25°C, V_{DD} at 3.3 V and are for design aid only: not guaranteed and not subject to production testing.

AC Electrical Characteristics† - $\overline{\text{FPo0}}$ and $\overline{\text{CKo0}}$ Timing when CKFP0 = 1

	Characteristic	Sym.	Min.	Typ.‡	Max.	Units	Notes
1	$\overline{\text{FPo0}}$ Output Pulse Width	t_{FPW0}	108	122	140	ns	C_L=30pF
2	$\overline{\text{FPo0}}$ Output Delay from the $\overline{\text{CKo0}}$ falling edge to the output frame boundary	t_{FODF0}	54		68	ns	
3	$\overline{\text{FPo0}}$ Output Delay from the output frame boundary to the $\overline{\text{CKo0}}$ Rising edge	t_{FODR0}	54		68	ns	
4	$\overline{\text{CKo0}}$ Output Clock Period	t_{CKP0}	108	122	140	ns	C_L=30pF
5	$\overline{\text{CKo0}}$ Output High Time	t_{CKH0}	54		69	ns	
6	$\overline{\text{CKo0}}$ Output Low Time	t_{CKL0}	54		69	ns	
7	$\overline{\text{CKo0}}$ Output Rise/Fall Time	t_{rCK0}, t_{fCK0}			10	ns	

† Characteristics are over recommended operating conditions unless otherwise stated.

‡ Typical figures are at 25°C, V_{DD} at 3.3 V and are for design aid only: not guaranteed and not subject to production testing.

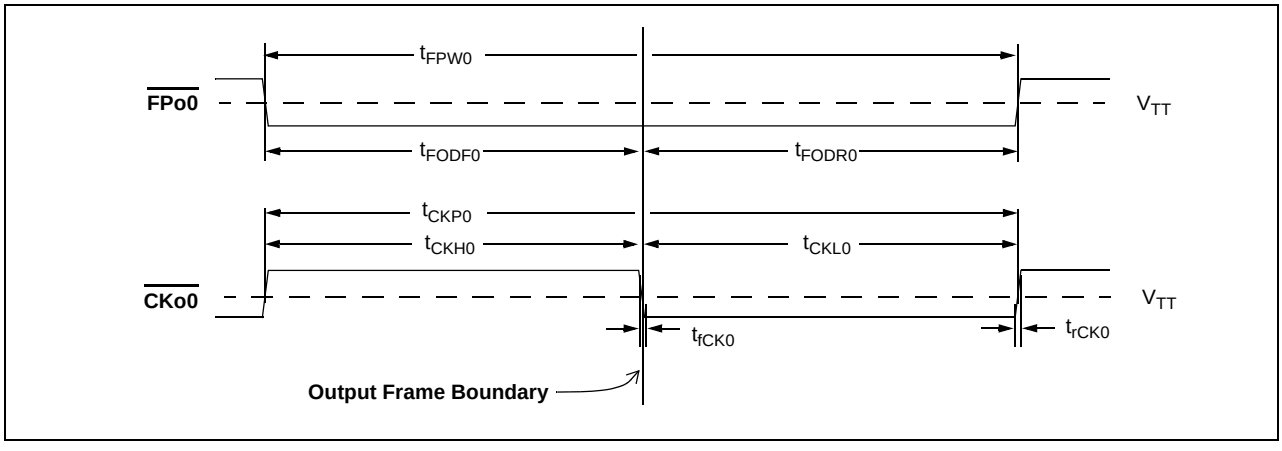

Figure 29 - $\overline{\text{FPo0}}$ and $\overline{\text{CKo0}}$ Timing Diagram

AC Electrical Characteristics† - $\overline{\text{FPo1}}$ and $\overline{\text{CKo1}}$ Timing when CKFP1 = 0

	Characteristic	Sym.	Min.	Typ.‡	Max.	Units	Notes
1	$\overline{\text{FPo1}}$ Output Pulse Width	t_{FPW1}	47	61	75	ns	C_L=30pF
2	$\overline{\text{FPo1}}$ Output Delay from the $\overline{\text{CKo1}}$ falling edge to the output frame boundary	t_{FODF1}	20		40	ns	
3	$\overline{\text{FPo1}}$ Output Delay from the output frame boundary to the $\overline{\text{CKo1}}$ Rising edge	t_{FODR1}	20		40	ns	
4	$\overline{\text{CKo1}}$ Output Clock Period	t_{CKP1}	47	61	75	ns	C_L=30pF
5	$\overline{\text{CKo1}}$ Output High Time	t_{CKH1}	20		40	ns	
6	$\overline{\text{CKo1}}$ Output Low Time	t_{CKL1}	20		40	ns	
7	$\overline{\text{CKo1}}$ Output Rise/Fall Time	t_{rCK1}, t_{fCK1}			10	ns	

† Characteristics are over recommended operating conditions unless otherwise stated.

‡ Typical figures are at 25°C, V_{DD} at 3.3 V and are for design aid only: not guaranteed and not subject to production testing.

AC Electrical Characteristics† - $\overline{\text{FPo1}}$ and $\overline{\text{CKo1}}$ Timing when CKFP1 = 1

	Characteristic	Sym.	Min.	Typ.‡	Max.	Units	Notes
1	$\overline{\text{FPo1}}$ Output Pulse Width	t_{FPW1}	108	122	140	ns	C_L=30pF
2	$\overline{\text{FPo1}}$ Output Delay from the $\overline{\text{CKo1}}$ falling edge to the output frame boundary	t_{FODF1}	54		68	ns	
3	$\overline{\text{FPo1}}$ Output Delay from the output frame boundary to the $\overline{\text{CKo1}}$ Rising edge	t_{FODR1}	54		68	ns	
4	$\overline{\text{CKo1}}$ Output Clock Period	t_{CKP1}	108	122	140	ns	C_L=30pF
5	$\overline{\text{CKo1}}$ Output High Time	t_{CKH1}	54		69	ns	
6	$\overline{\text{CKo1}}$ Output Low Time	t_{CKL1}	54		69	ns	
7	$\overline{\text{CKo1}}$ Output Rise/Fall Time	t_{rCK1}, t_{fCK1}			10	ns	

† Characteristics are over recommended operating conditions unless otherwise stated.

‡ Typical figures are at 25°C, V_{DD} at 3.3 V and are for design aid only: not guaranteed and not subject to production testing.

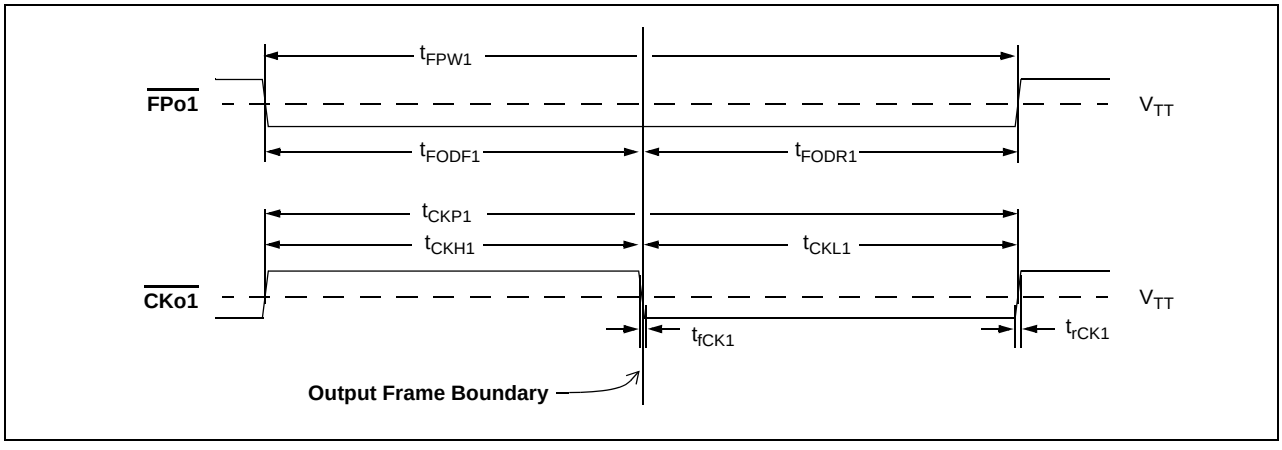

Figure 30 - $\overline{\text{FPo1}}$ and $\overline{\text{CKo1}}$ Timing Diagram

AC Electrical Characteristics† - $\overline{\text{FPo2}}$ and $\overline{\text{CKo2}}$ Timing when CKFP2 = 0

	Characteristic	Sym.	Min.	Typ.‡	Max.	Units	Notes
1	$\overline{\text{FPo2}}$ Output Pulse Width	t_{FPW2}	15	30	45	ns	C_L=30pF
2	$\overline{\text{FPo2}}$ Output Delay from the $\overline{\text{CKo2}}$ falling edge to the output frame boundary	t_{FODF2}	8		22	ns	
3	$\overline{\text{FPo2}}$ Output Delay from the output frame boundary to the $\overline{\text{CKo2}}$ Rising edge	t_{FODR2}	8		22	ns	
4	$\overline{\text{CKo2}}$ Output Clock Period	t_{CKP2}	15	30	45	ns	C_L=30pF
5	$\overline{\text{CKo2}}$ Output High Time	t_{CKH2}	8		22	ns	
6	$\overline{\text{CKo2}}$ Output Low Time	t_{CKL2}	8		22	ns	
7	$\overline{\text{CKo2}}$ Output Rise/Fall Time	t_{rCK2}, t_{fCK2}			7	ns	

† Characteristics are over recommended operating conditions unless otherwise stated.

‡ Typical figures are at 25°C, V_{DD} at 3.3 V and are for design aid only: not guaranteed and not subject to production testing.

AC Electrical Characteristics† - $\overline{\text{FPo2}}$ and $\overline{\text{CKo2}}$ Timing when CKFP2 = 1

	Characteristic	Sym.	Min.	Typ.‡	Max.	Units	Notes
1	$\overline{\text{FPo2}}$ Output Pulse Width	t_{FPW2}	47	61	75	ns	C_L=30pF
2	$\overline{\text{FPo2}}$ Output Delay from the $\overline{\text{CKo2}}$ falling edge to the output frame boundary	t_{FODF2}	20		40	ns	
3	$\overline{\text{FPo2}}$ Output Delay from the output frame boundary to the $\overline{\text{CKo2}}$ Rising edge	t_{FODR2}	20		40	ns	
4	$\overline{\text{CKo2}}$ Output Clock Period	t_{CKP2}	47	61	75	ns	C_L=30pF
5	$\overline{\text{CKo2}}$ Output High Time	t_{CKH2}	20		40	ns	
6	$\overline{\text{CKo2}}$ Output Low Time	t_{CKL2}	20		40	ns	
7	$\overline{\text{CKo2}}$ Output Rise/Fall Time	t_{rCK2}, t_{fCK2}			10	ns	

† Characteristics are over recommended operating conditions unless otherwise stated.

‡ Typical figures are at 25°C, V_{DD} at 3.3 V and are for design aid only: not guaranteed and not subject to production testing.

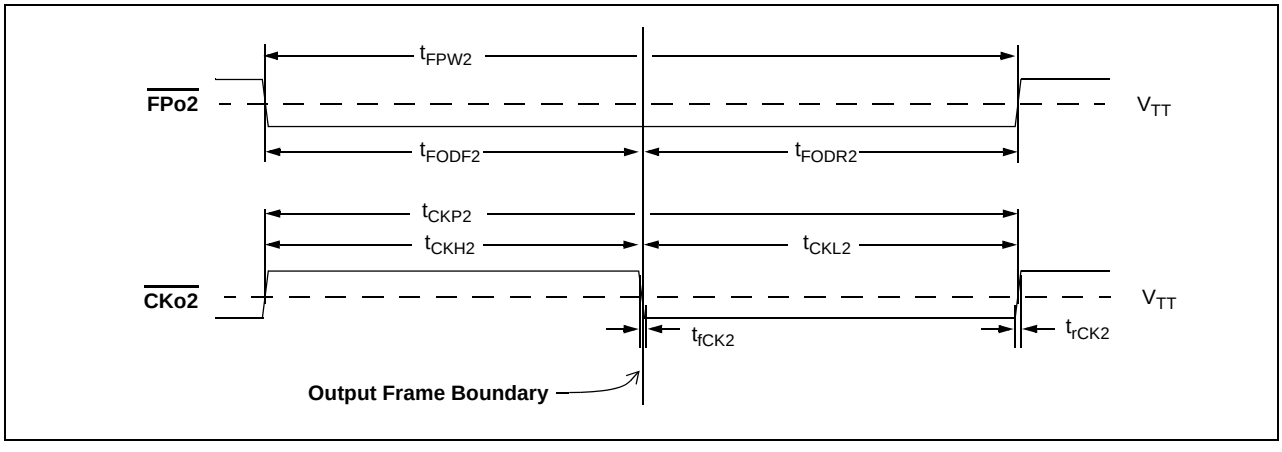

Figure 31 - $\overline{\text{FPo2}}$ and $\overline{\text{CKo2}}$ Timing Diagram

AC Electrical Characteristics† - ST-BUS Input Timing

	Characteristic	Sym.	Min.	Typ.‡	Max.	Units	Test Conditions
1	STi Setup Time 2.048 Mb/s 4.096 Mb/s 8.192 Mb/s	 t_{SIS2} t_{SIS4} t_{SIS8}	 3 3 3			 ns ns ns	
2	STi Hold Time 2.048 Mb/s 4.096 Mb/s 8.192 Mb/s	 t_{SIH2} t_{SIH4} t_{SIH8}	 3 3 3			 ns ns ns	

† Characteristics are over recommended operating conditions unless otherwise stated.

‡ Typical figures are at 25°C, V_{DD} at 3.3 V and are for design aid only: not guaranteed and not subject to production testing.

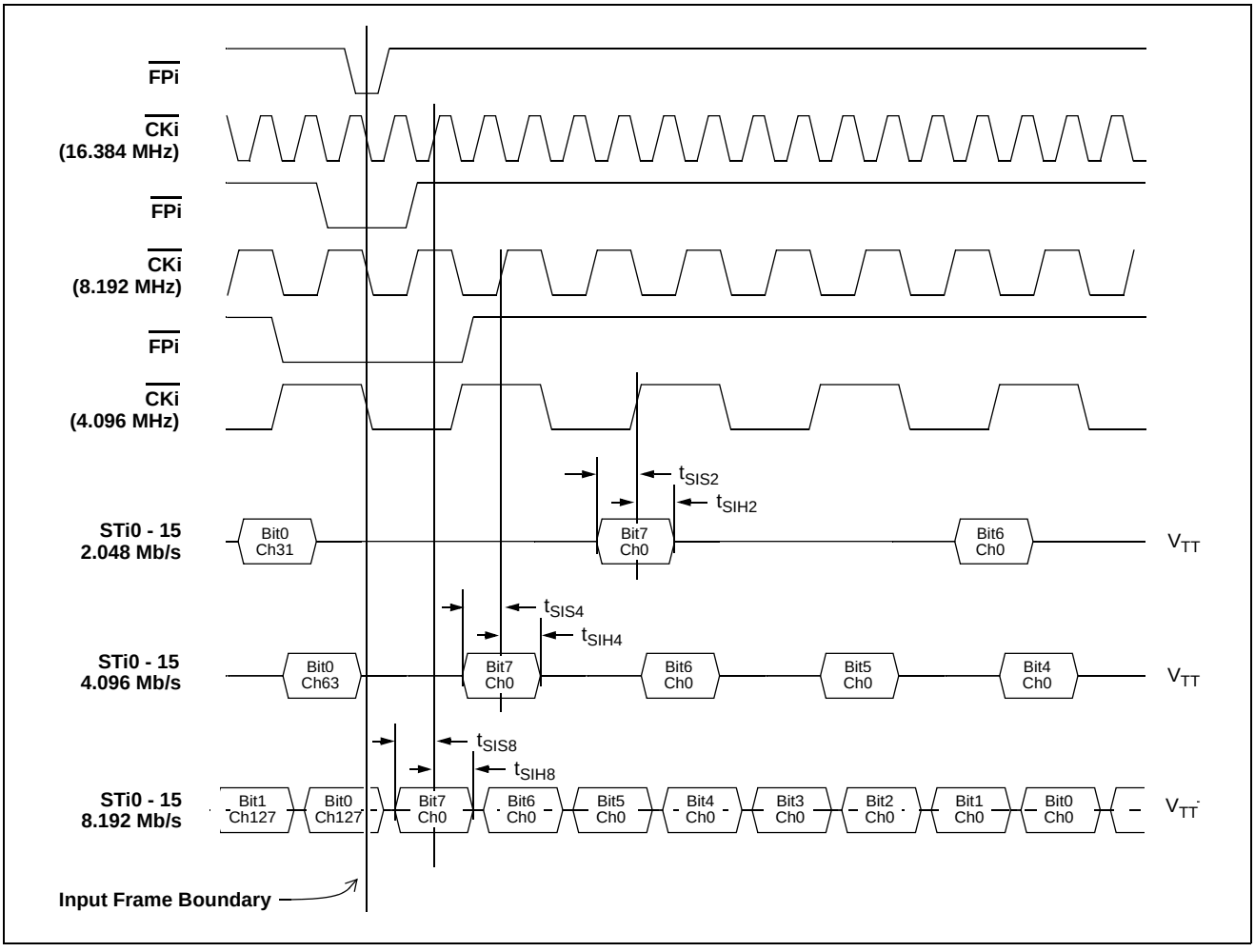

Figure 32 - ST-BUS Inputs (STi0 - 15) Timing Diagram

AC Electrical Characteristics† - ST-BUS Output Timing

	Characteristic	Sym.	Min.	Typ.‡	Max.	Units	Test Conditions
1	STo Delay - Active to Active @2.048 Mb/s @4.096 Mb/s @8.192 Mb/s	t_{SOD2} t_{SOD4} t_{SOD8}			10 10 10	ns ns ns	C_L = 30pF

† Characteristics are over recommended operating conditions unless otherwise stated.

‡ Typical figures are at 25°C, V_{DD} at 3.3 V and are for design aid only: not guaranteed and not subject to production testing.

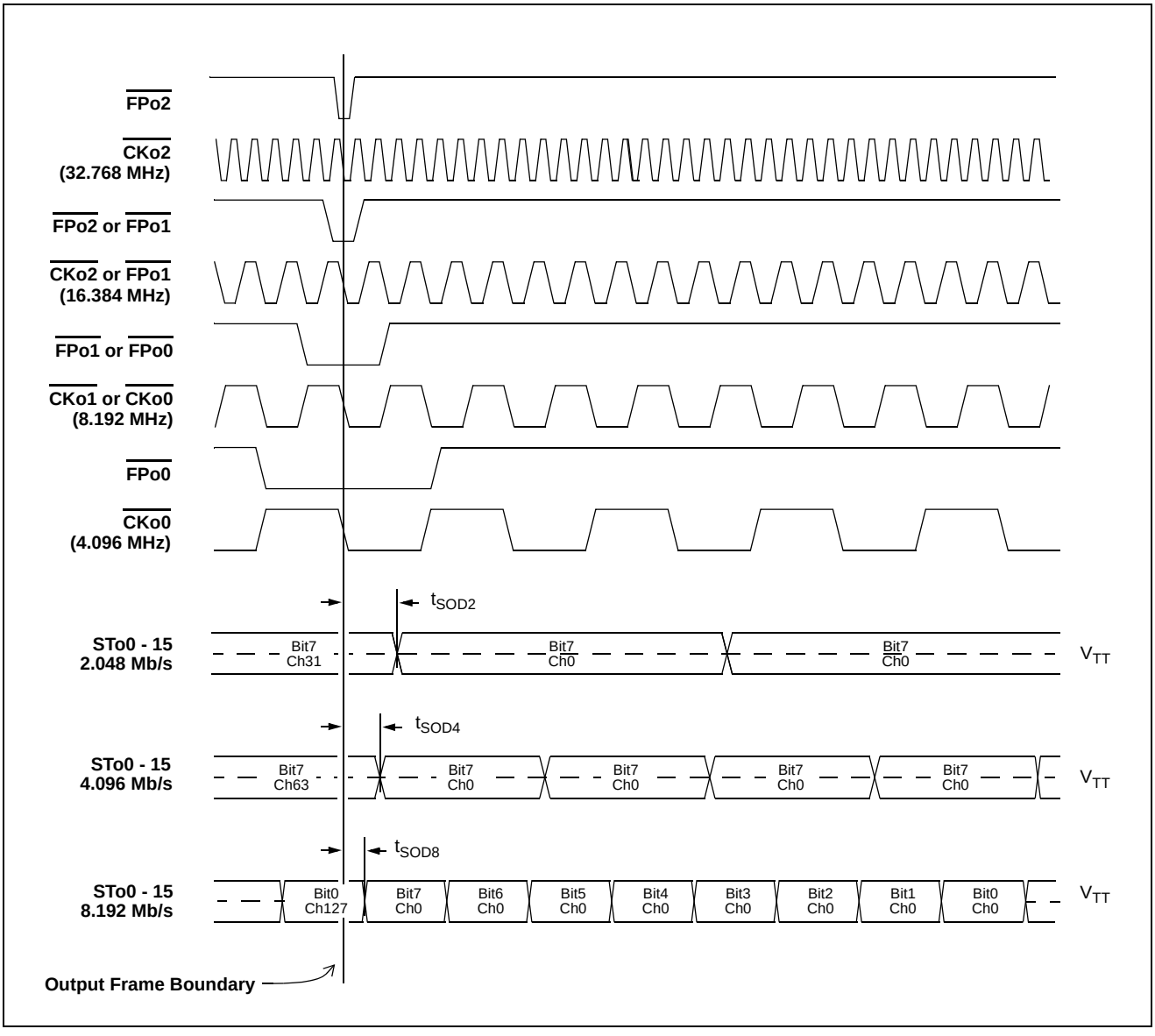

Figure 33 - ST-BUS Outputs (STo0 - 15) Timing Diagram

AC Electrical Characteristics† - ST-BUS Output Tristate Timing

	Characteristic	Sym.	Min.	Typ.‡	Max.	Units	Test Conditions
1	STo Delay - Active to High-Z STo Delay - High-Z to Active 2.048 Mb/s 4.096 Mb/s 8.192 Mb/s	t_{DZ}, t_{ZD}			 15 15 15	 ns ns ns	R_L=1K, C_L=30pF, See Note 1.
2	Output Driver Enable (ODE) Delay - High-Z to Active 2.048 Mb/s 4.096 Mb/s 8.192 Mb/s	t_{ZD_ODE}			 45 45 45	 ns ns ns	
2	Output Driver Disable (ODE) Delay - Active to High-Z 2.048 Mb/s 4.096 Mb/s 8.192 Mb/s	t_{DZ_ODE}			 30 30 30	 ns ns ns	

† Characteristics are over recommended operating conditions unless otherwise stated.

‡ Typical figures are at 25°C and are for design aid only: not guaranteed and not subject to production testing.

* Note 1: High Impedance is measured by pulling to the appropriate rail with R_L, with timing corrected to cancel the time taken to discharge C_L.

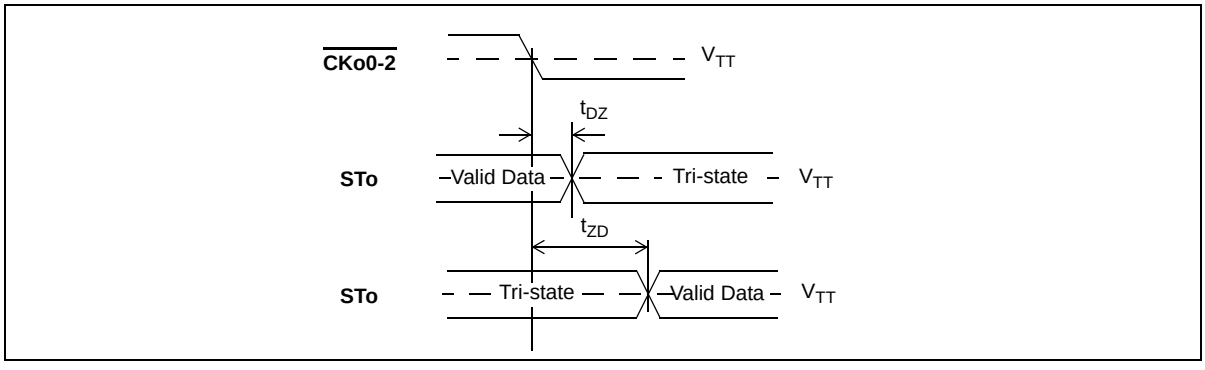

Figure 34 - Serial Output and External Control

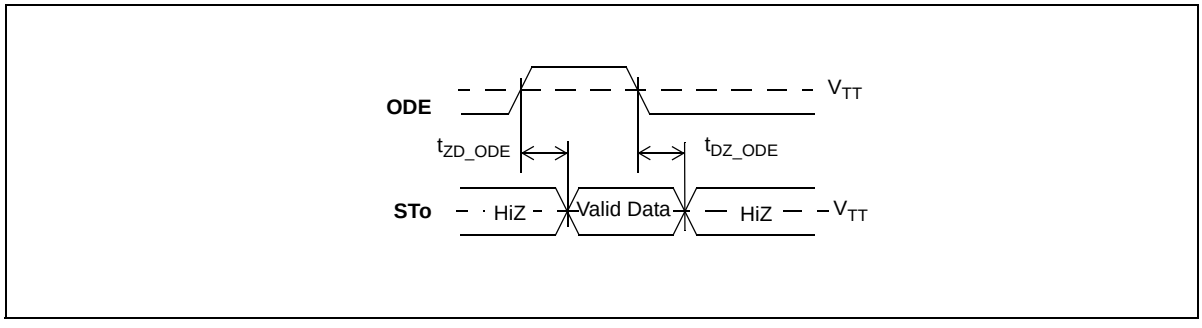

Figure 35 - Output Driver Enable (ODE)

AC Electrical Characteristics - Motorola Non-Multiplexed Bus Mode

	Characteristics	Sym.	Min.	Typ.	Max.	Units	Test Conditions[2]
1	$\overline{CS}$ setup from $\overline{DS}$ falling	t_{CSS}	0			ns	
2	R/$\overline{W}$ setup from $\overline{DS}$ falling	t_{RWS}	10			ns	
3	Address setup from $\overline{DS}$ falling	t_{ADS}	5			ns	
4	$\overline{DS}$ delay from the rising edge of $\overline{DTA}$ to the falling edge of the $\overline{DS}$	t_{DSD}	50			ns	
5	$\overline{CS}$ delay from the rising edge of $\overline{DTA}$ to the falling edge of the $\overline{CS}$	t_{CSD}	50			ns	
6	$\overline{CS}$ hold after $\overline{DS}$ rising	t_{CSH}	0			ns	
7	R/$\overline{W}$ hold after $\overline{DS}$ rising	t_{RWH}	0			ns	
8	Address hold after $\overline{DS}$ rising	t_{ADH}	0			ns	
9	Data setup from $\overline{DTA}$ Low on Read	t_{DDR}	20			ns	C_L=30pF
10	Data hold on read	t_{DHR}	3		9	ns	C_L=30pF, R_L=1K (Note 1)
11	Data setup from $\overline{DS}$ falling on write	t_{WDS}	10			ns	
12	Data hold on write	t_{DHW}	0			ns	
13	Acknowledgment Delay: Reading/Writing Registers Reading/Writing Memory	t_{AKD}			 120/105 200/150	 ns ns	 C_L=30pF C_L=30pF
14	Acknowledgment Hold Time	t_{AKH}			20	ns	C_L=30pF, R_L=1K (Note 1)

Note 1: High Impedance is measured by pulling to the appropriate rail with R_L, with timing corrected to cancel time taken to discharge C_L.
Note 2: A delay of 600 microseconds must be applied before the first microprocessor access is performed after the RESET pin is set high.

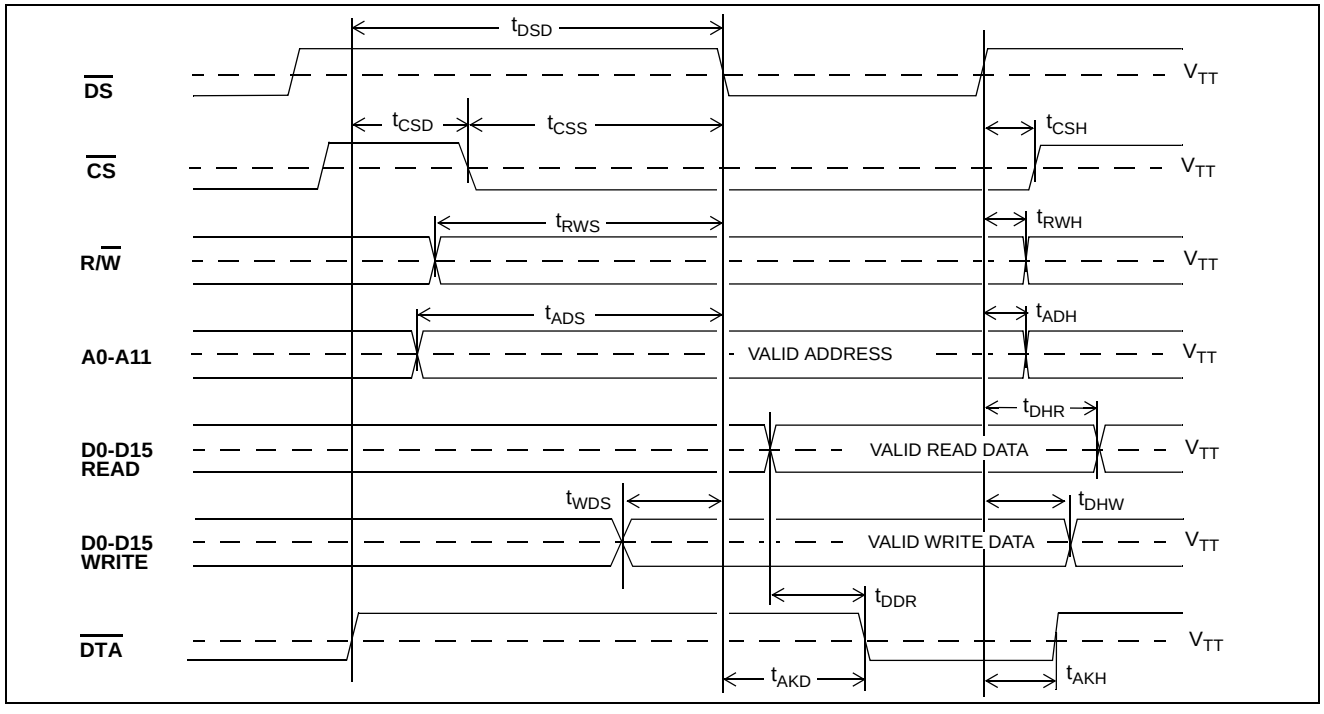

Figure 36 - Motorola Non-Multiplexed Bus Timing

AC Electrical Characteristics† - JTAG Test Port and $\overline{\text{Reset}}$ Pin Timing

	Characteristic	Sym.	Min.	Typ.	Max.	Units	Notes
1	TCK Clock Period	t_{TCKP}	100			ns	
2	TCK Clock Pulse Width High	t_{TCKH}	80			ns	
3	TCK Clock Pulse Width Low	t_{TCKL}	80			ns	
4	TMS Set-up Time	t_{TMSS}	10			ns	
5	TMS Hold Time	t_{TMSH}	10			ns	
6	TDi Input Set-up Time	t_{TDIS}	20			ns	
7	TDi Input Hold Time	t_{TDIH}	60			ns	
8	TDo Output Delay	t_{TDOD}		25		ns	C_L=30pF
9	$\overline{\text{TRST}}$ pulse width	t_{TRSTW}	200			ns	
10	$\overline{\text{Reset}}$ pulse width	t_{RSTW}	1.0			ms	

†Characteristics are over recommended operating conditions unless otherwise stated.

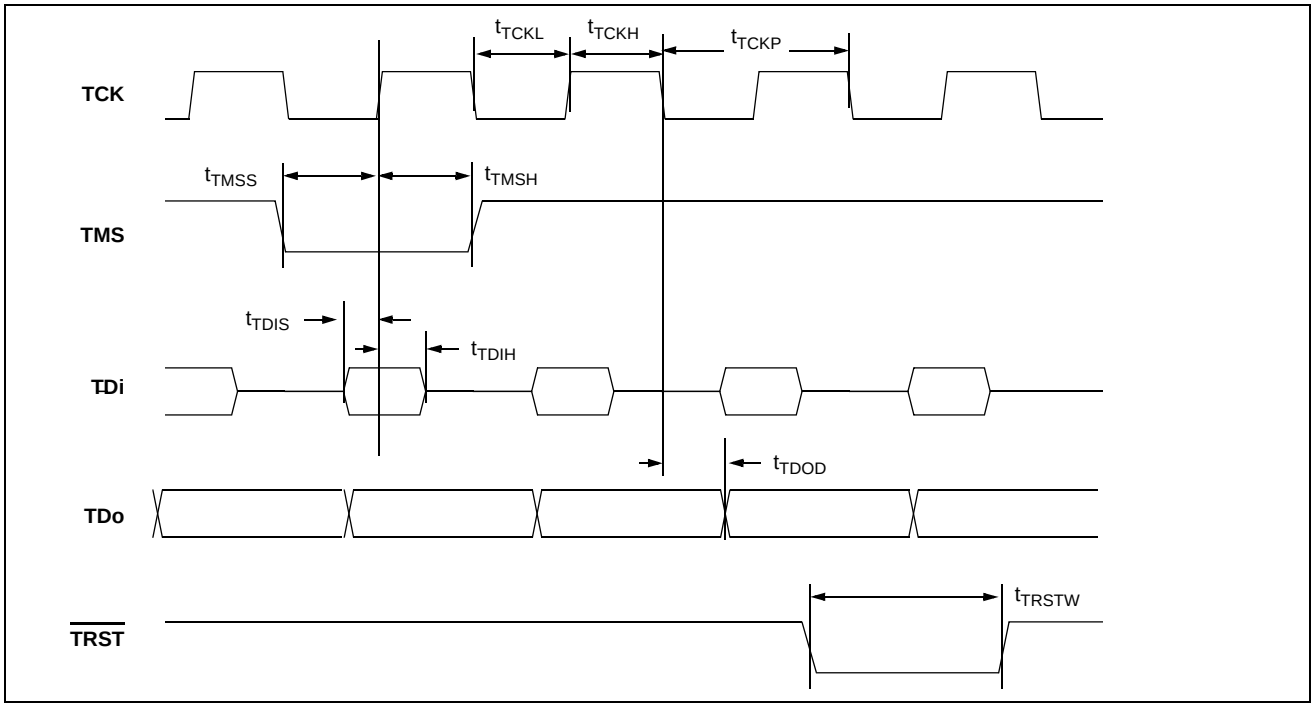

Figure 37 - JTAG Test Port Timing Diagram

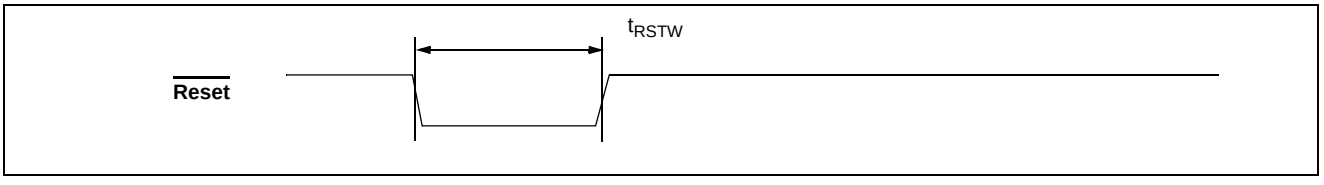

Figure 38 - $\overline{\text{Reset}}$ Pin Timing Diagram

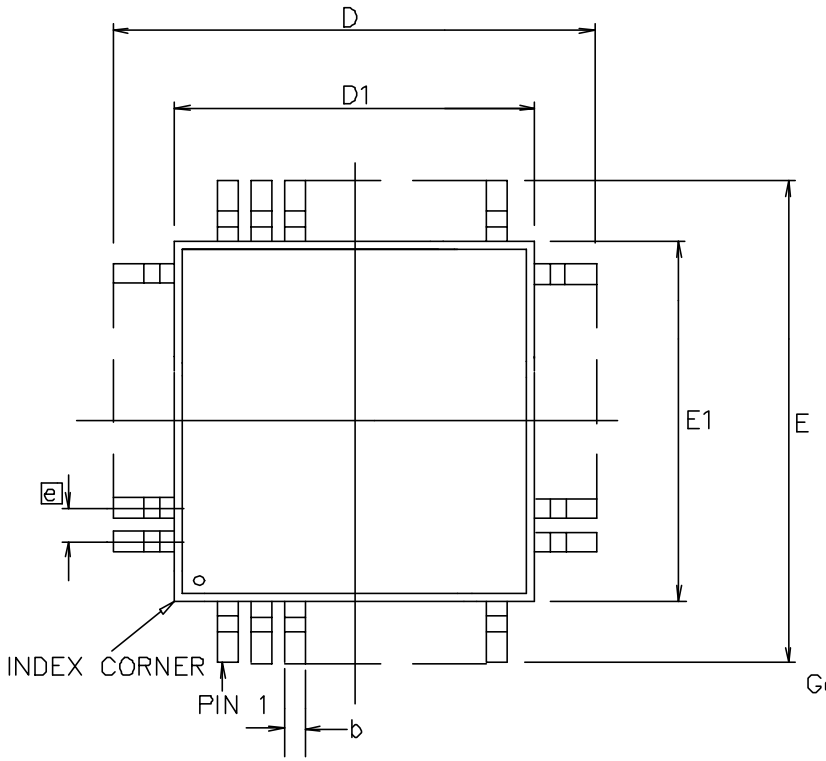

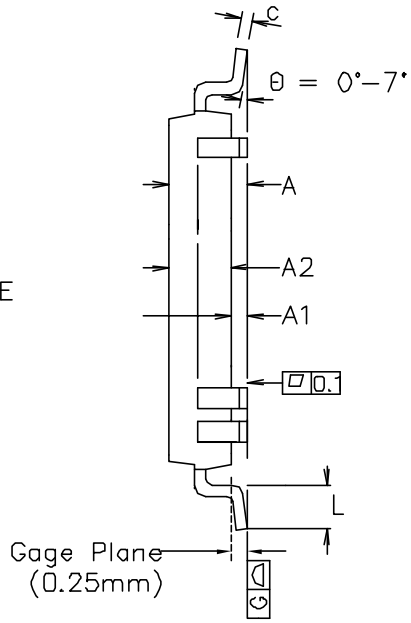

Symbol	Control Dimensions in millimetres			Altern. Dimensions in inches	
	MIN	MAX		MIN	MAX
A	---	1.60		---	0.047
A1	0.05	0.15		0.002	0.006
A2	1.35	1.45		0.053	0.057
D	26.00 BSC			1.024 BSC	
D1	24.00 BSC			0.945 BSC	
E	26.00 BSC			1.024 BSC	
E1	24.00 BSC			0.945 BSC	
L	0.45	0.75		0.018	0.030
e	0.50 BSC			0.020 BSC	
b	0.17	0.27		0.007	0.011
c	0.09	0.20		0.004	0.008
	Pin features				
N	160				
ND	40				
NE	40				
NOTE	SQUARE				

Conforms to JEDEC MS–026 BGA Iss. C
Except for number of pins.

Notes:
1. Pin 1 indicator may be a corner chamfer, dot or both.
2. Controlling dimensions are in millimeters.
3. The top package body size may be smaller than the bottom package body size by a max. of 0.15 mm.
4. Dimension D1 and E1 do not include mould protrusion.
5. Dimension b does not include dambar protusion.
6. Coplanarity, measured at seating plane G, to be 0.08 mm max.

© Zarlink Semiconductor 2002 All rights reserved.

ISSUE	1	2	3	
ACN	201652	207156	213835	
DATE	12Dec96	16Jul99	11Dec02	
APPRD.				

ZARLINK SEMICONDUCTOR

Previous package codes

Package Code

Package Outline for 160 Lead LQFP (QC) (24x24x1.4)mm + 2.0mm (footprint)

GPD00269

TOP VIEW

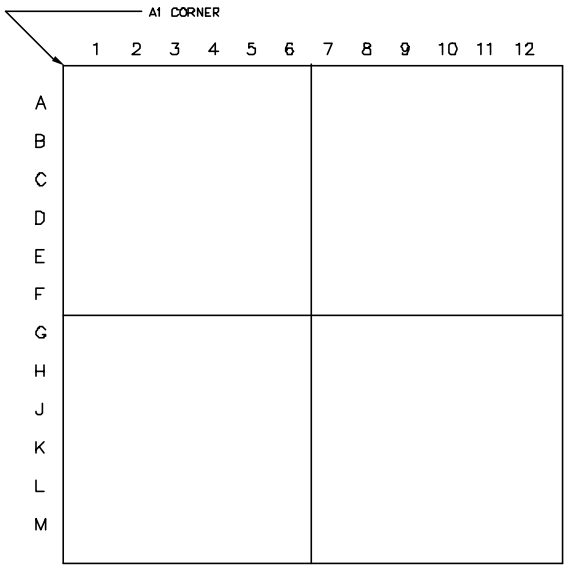

BOTTOM VIEW

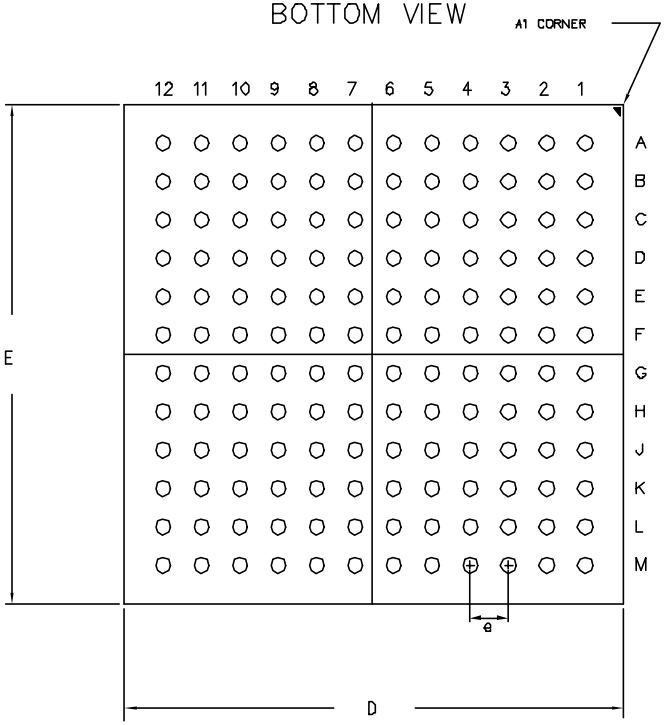

DIMENSION	MIN	MAX
A	–	1.25
A1	0.25	0.35
A2	0.53 REF	
D	12.95	13.05
E	12.95	13.05
b	0.35	0.45
e	1.00	
N	144	
Conforms to JEDEC MO-192		

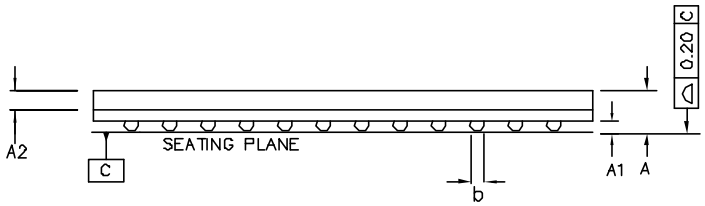

SIDE VIEW

NOTES: –
1. Controlling dimensions are in MM.
2. Seating plane is defined by the spherical crown of the solder balls.
3. Not to scale.
4. N is the number of solder balls
5. Substrate thickness is 0.36 MM.

© Zarlink Semiconductor 2002 All rights reserved.

ISSUE	1	2		
ACN	213740	213834		
DATE	15Nov02	11Dec02		
APPRD.				

ZARLINK SEMICONDUCTOR

Previous package codes

Package Code GD

Package Outline for 144Ball LBGA 13x13x1.25mm

GPD00805

For more information about all Zarlink products visit our Web Site at

www.zarlink.com

Information relating to products and services furnished herein by Zarlink Semiconductor Inc. or its subsidiaries (collectively "Zarlink") is believed to be reliable. However, Zarlink assumes no liability for errors that may appear in this publication, or for liability otherwise arising from the application or use of any such information, product or service or for any infringement of patents or other intellectual property rights owned by third parties which may result from such application or use. Neither the supply of such information or purchase of product or service conveys any license, either express or implied, under patents or other intellectual property rights owned by Zarlink or licensed from third parties by Zarlink, whatsoever. Purchasers of products are also hereby notified that the use of product in certain ways or in combination with Zarlink, or non-Zarlink furnished goods or services may infringe patents or other intellectual property rights owned by Zarlink.

This publication is issued to provide information only and (unless agreed by Zarlink in writing) may not be used, applied or reproduced for any purpose nor form part of any order or contract nor to be regarded as a representation relating to the products or services concerned. The products, their specifications, services and other information appearing in this publication are subject to change by Zarlink without notice. No warranty or guarantee express or implied is made regarding the capability, performance or suitability of any product or service. Information concerning possible methods of use is provided as a guide only and does not constitute any guarantee that such methods of use will be satisfactory in a specific piece of equipment. It is the user's responsibility to fully determine the performance and suitability of any equipment using such information and to ensure that any publication or data used is up to date and has not been superseded. Manufacturing does not necessarily include testing of all functions or parameters. These products are not suitable for use in any medical products whose failure to perform may result in significant injury or death to the user. All products and materials are sold and services provided subject to Zarlink's conditions of sale which are available on request.

Purchase of Zarlink's I^2C components conveys a licence under the Philips I^2C Patent rights to use these components in and I^2C System, provided that the system conforms to the I^2C Standard Specification as defined by Philips.

Zarlink, ZL and the Zarlink Semiconductor logo are trademarks of Zarlink Semiconductor Inc.

Copyright Zarlink Semiconductor Inc. All Rights Reserved.

TECHNICAL DOCUMENTATION - NOT FOR RESALE