G7336 = Product group; Product group discount G 73 3_

RITEL Collet Knobs
Shaft: 6mm
Diameter: 15mm
Colours: Grey, Black, Shiny
Series: DKG15

Part Nr.	Part description
DKG15-GR	Knob 15/6mm Grey
DKG15-SW	Knob 15/6mm Black
DKG15-SWA	Knob 15/6mm Black with Line

Features
See introduction text "G7331 to G7345" before product group G7331

Terms of Delivery
Minimum order quantity: 1 PKU = 25 pieces

Manufacturer: ritel
http://www.ritel.ch

DKG15-_

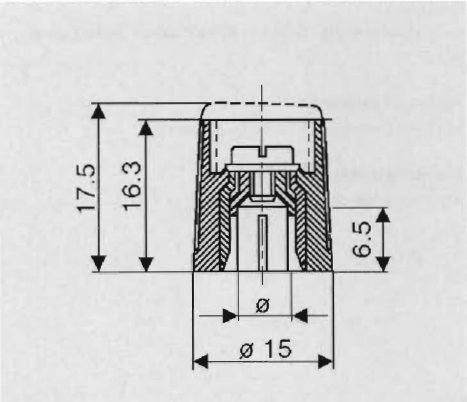

DKG15-_

G7337 = Product group; Product group discount G 73 3_

RITEL Caps for DKK15_ and DKG15_
Colours: Blue, Grey, Red, Black, Shiny
Series: DKG15D

Part Nr.	Part description
DKG15D-BL	Cap for DKG15 Blue
DKG15D-GR	Cap for DKG15 Grey
DKG15D-RT	Cap for DKG15 Red
DKG15D-SW	Cap for DKG15 Black

Features
See introduction text "G7331 to G7345" before product group G7331

Terms of Delivery
Minimum order quantity: 1 PKU = 25 pieces

Manufacturer: ritel
http://www.ritel.ch

DKG15D-_

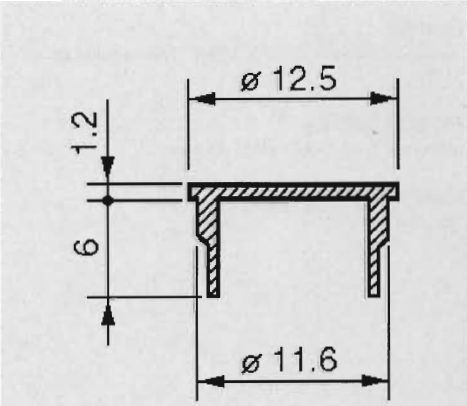

DKG15D-_

G7338 = Product group; Product group discount G 73 3_

RITEL Pointer for DKG15_
Colours: Grey, Red, Black, Shiny
Series: DKG15P

Part Nr.	Part description
DKG15P-GR	Pointer for DKG15 Grey
DKG15P-RT	Pointer for DKG15 Red
DKG15P-SW	Pointer for DKG15 Black

Features
See introduction text "G7331 to G7345" before product group G7331

Terms of Delivery
Minimum order quantity: 1 PKU = 25 pieces

Manufacturer: ritel
http://www.ritel.ch

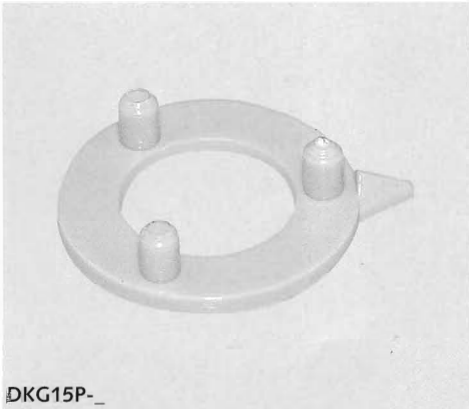
DKG15P-_

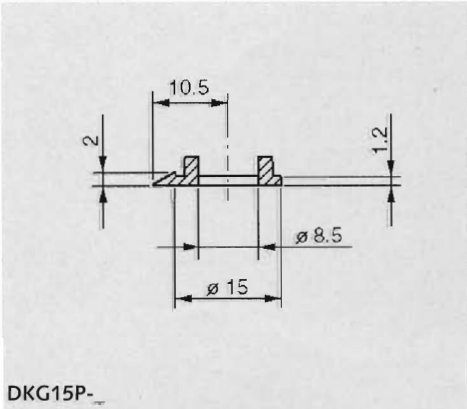

DKG15P-_