EXCELLENCE OPTO. INC.

EOL-5KBECC0-GG

Date	Spec. Number	Ver.
2006/4/4	L-387-00	A-01

Device Selection Guide

Part Number EOL-	Luminous Intensity Iv(mcd) @ I_F = 20mA		Viewing Angle $2\theta_{1/2}$	Dominant Wavelength λ_D(nm) @ I_F = 20mA	Forward Voltage V_F (v) @ I_F = 20 mA		I_R(μA) @ V_R = 5V	Stand Off	Epoxy Color
	Min.	Typ.	Typ.	Typ.	Typ.	Max.	Max.		
5KBECC0-GG	1135	1600	23°	470	3.4	4.0	10	No	Clear

BIN #	S	T	U		
Intensity (mcd) @ I_F=20mA	1135-1590	1590-2225	2225-3115		

Package Dimensions

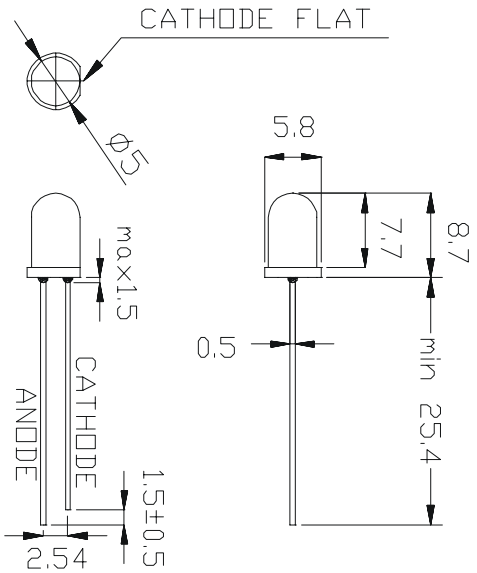

Beam Pattern

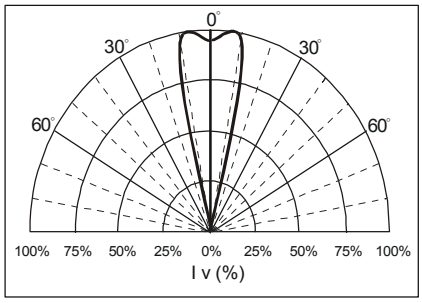

Note:

- All dimensions are in millimeter.
- Unspecified tolerance : ±0.20mm.
- Protruded resin under bottom surface of epoxy is1.5mm max.
- Lead spacing is measured where the leads emerge from the package
- Specifications are subject to be changed without notice.

Absolute Maximum Ratings at T_A = 25℃

Parameter	Symbol	Maximum Value	*USER---APPROVED*
Average Forward Current	I_F	20mA	
Peak Forward Current[a]	I_{peak}	50mA	
Reverse Voltage	V_R	5V	
Power Dissipation	P_D	80mW	
Operating Temperature Range	T_{OPR}	-40℃ ~ + 85℃	
Storage Temperature Range	T_{STO}	-40℃ ~ + 100℃	
Lead Soldering Temperature	T_{SOL}	260℃ / 5 seconds	

Notes: [a] Duty Ratio = 1/10, Pulse Width = 0.1ms.

Headquarters
5F, No. 1, Creation Road II, Hsinchu Science Park,
Hsinchu, Taiwan 300, R.O.C.
Tel : 886-3-5679000 Fax : 886-3-5679999
http://www.eoi.com.tw E-mail : Service@eoi.com.tw

U.S. Office
1400 W. Lambert Road, Suite B,
Brea, CA92821, U.S.A
Tel : 1-562-694-1246 Fax : 1-562-691-3087
http://www.eoi-us.com E-mail : Sales@eoius.com