LEDTECH ELECTRONICS CORP.

(Zone 22) North Guiyuan Rd., West Jixi Rd., Duanzhou District, Zhaoqing City, Guangdong Province, China
TEL:86-758-2877017,2875541,2870651,2877464
FAX:86-758-2878014
Http://www.ledtech.com.tw

SPECIFICATION

PART NO. : LA(C)5621-S2 BWRS

0.56"(14.22mm)SINGLE DIGIT DISPLAY

Approved by	Checked by	Prepared by
Yue	*Lian*	*Liang Dai*

Property of Ledtech Corporation. Unauthorized changes or alterations to the specification are prohibited.

Ledtech	**LA(C)5621-S2**	0.56" SINGLE DIGIT DISPLAY

MODIFY RECORD

TAKE EFFECT DATE	MODIFY ISSUES	REMARKS

Dimensions

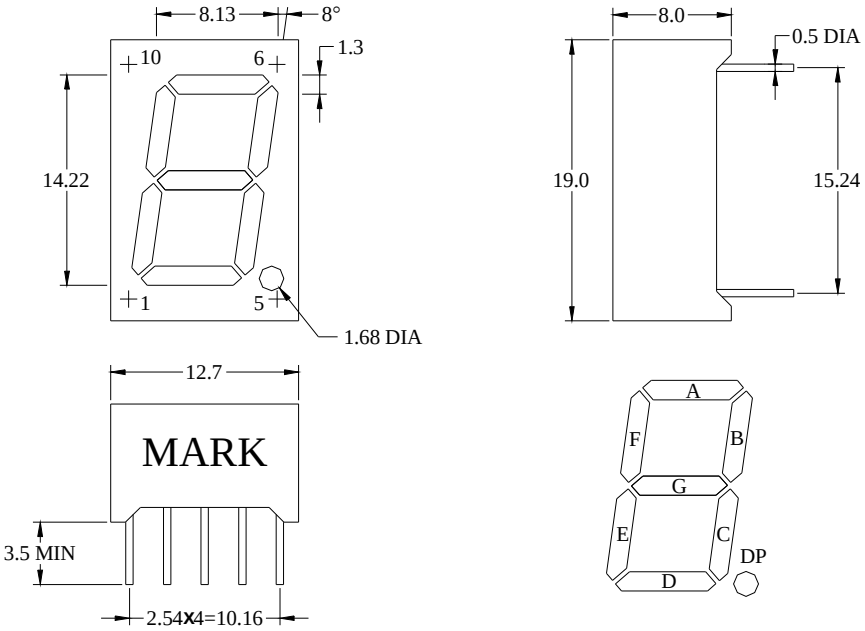

Notes:

1. THE SLPE ANGLE OF ANY PIN MAY BE ±5.0° MAX.
2. ALL DIMENSIONS ARE IN mm,TOLERANCE IS ±0.25mm UNLESS OTHERWISE NOTED.

Internal Circuit Diagram

LA5621-S2

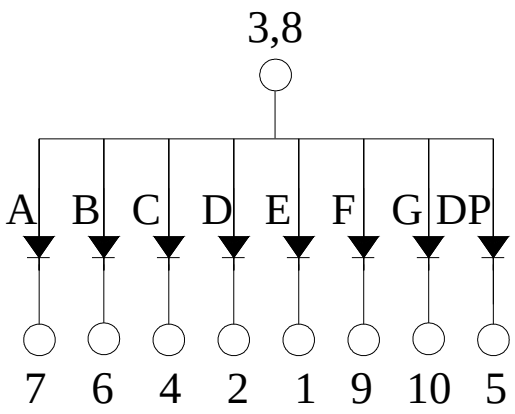

LC5621-S2

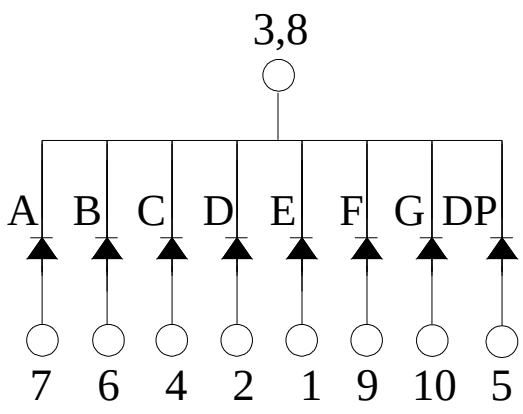

Description

Part No.	LED Chip		Face Color	
	Material	Emitting Color	Surface	Segments
LA5621-S2 BWRS	GaP/GaP	Yellow Green	Black	White
LC5621-S2 BWRS	GaP/GaP	Yellow Green	Black	White

Absolute Maximum Ratings at Ta=25 ℃

Parameter	Symbol	Rating	Unit
Power Dissipation Per Segment	P_D	78	mW
Pulse Current(1/10Duty Cycle,0.1ms Pulse Width.)Per Chip	I_{FP}	100	mA
Forward Current Per Chip	I_F	30	mA
Reverse (Leakage)Current Per Chip	Ir	100	uA
Reverse Voltage Per Chip	V_R	5	V
Operating Temperature Range	Topr.	-25 to +85	℃
Storage Temperature Range	Tstg.	-40 to +100	℃
Lead Soldering Temperature.(1.6mm from seating plane)	Tsol.	260 for 5s MAX.	℃

Electrical and Optical Characteristics:

Parameter	Symbol	Condition	Min.	Typ.	Max.	Unit
Luminous Intensity Per Segment	Iv	If=10mA/seg.	1.7	2.9		mcd
Forward Voltage	Vf	If=20mA/seg.		2.1	2.6	V
Peak Wavelength	λP	If=20mA/seg.		567		nm
Dominant Wavelength	λD	If=20mA/seg.		572		nm
Reverse Current Per Chip (Leakage Current Per Chip)	Ir	Vr=5			100	μA
Spectrum Line Halfwidth	Δλ	If=20mA/seg.		30		nm
Response Time	T	----------		250		ns

Notes: 1.Tolerance of Luminous Intensity is ±15%
2.Tolerance of Forward Voltage is ±0.1V
3.Tolerance of Dominant Wavelength is ±1nm
4.Customer' s special requirements are also welcome

Typical Electrical/Optical Characteristic Curves

(25℃ Ambient Temperature Unless Otherwise Noted)

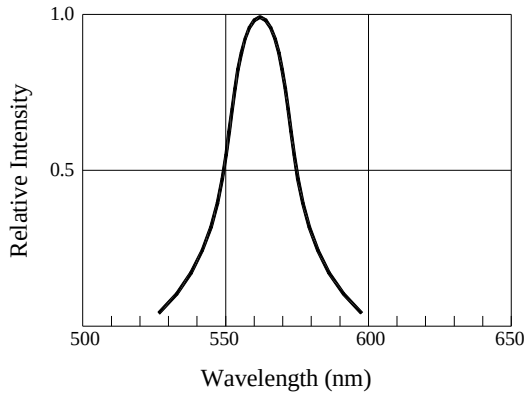

Fig.1 RELATIVE INTENSITY VS. WAVELENGTH

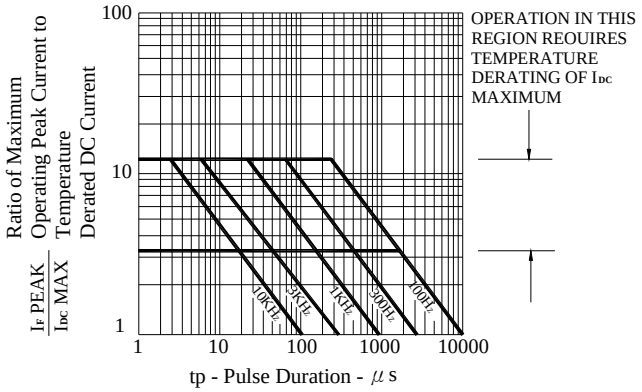

Fig.2 MAXIMUM TOLERABLE PEAK CURRENT VS. PULSE DURATION

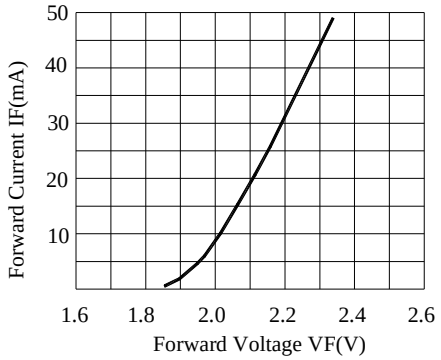

Fig .3 FORWARD CURRENT VS. FORWARD VOLTAGE PER CHIP

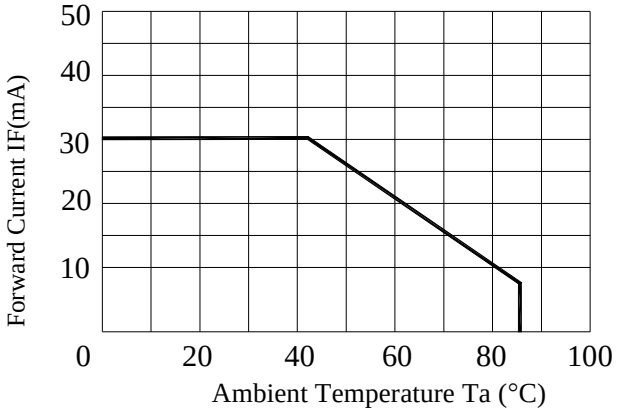

Fig.4 FORWARD CURRENT VS. DERATING CURVE

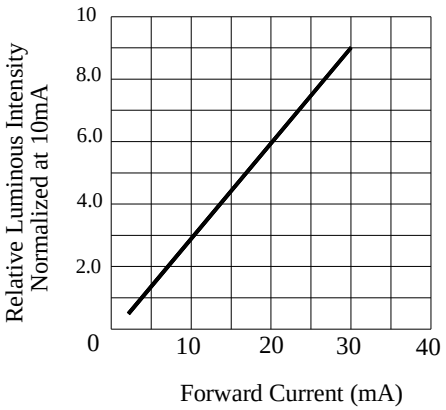

Fig.5 RELATIVE LUMINOUS INTENSITY VS. FORWARD CURRENT

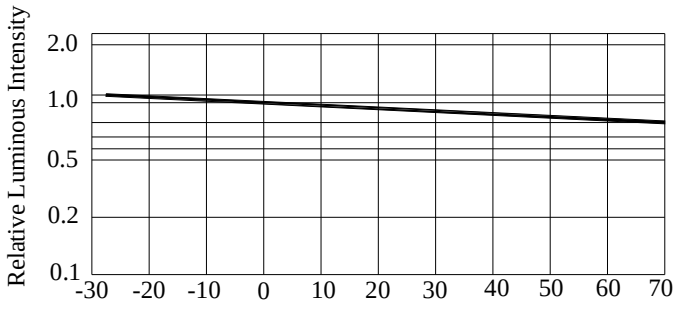

Fig.6 LUMINOUS INTENSITY VS. AMBIENT TEMPERATURE

Precautions in Use:

PLEASE PAY SPECIAL ATTNTION TO THE NEXT POINT TO INCORPORATE OPTO DEVICE TO HIGH RELIABILITY

1. Do not bend the lead. Bending leads could cause breakage of leads or the degradation of the chip.
   When bending is unavoidable, strictly follow the cautionary instruction below.
   (1)Bend the leads before soldering.
   (2)Bending a lead must be done by fixing a lead tightly and applying no stress on the resin part.
   (3) The lead bending point must be more than 1.6mm away from the edge or the resin part.
   (4)When a pin is tested for its endurance, bending degree should be 45° and repeated no more than two times.
2. Setting a product by using tool such as a holder should be avoided.
   When necessary, no stress should be applied to the resin part and lead to consider dimension tolerance, thermal expansion, thermal contraction of holder, product and circuit board etc.
3. The hole pitch of a circuit board must fit into the lead pitch of products.
4. When soldering, care the followings:
   (1)Do not heat a product under any stress (i.e.: twist) to leads.
   (2)Do not heat (for example, by soldering) a product while out side force is applied the resin part.
   (3 The lead bending point must be more than 1.6mm away from the edge or the resin part.
   (4)Soldering with PC Board should be conducted with following conditions.
   (a) For dip soldering
   Pre-heating : 90℃ Max. for within 60 Sec.
   Soldering Max. : 260±5℃(Solder Temp.) for within 5 Sec.
   (b) Soldering iron : 350℃(Soldering iron tip) for within 3 Sec.
5. Flux could corrode the leads.Use flux that contains as little chlorine as possible (RA, RMA, less than 0.2 wt%) and need not be washed way. When, however, washing is necessary, partially wash around the leads, instead of the entire LED, by the following conditions.
   Cleaning agent : Methyl Alcohol
   Cleaning temp : 45℃Max.
   Cleaning time : 30Sec. Max.
6. Minimum amount of soldering flux should be used. Soldering flux should be applied only to the pin portion.
7. The following may damage products or LED chips: Attachment or contact of residual flux solvent onto the product surface or to LED chips, or invasion of the same into the product.

Disclaimer

1. Our department reserves the right(s) on the adjustment of product material mix for the specification.
2. The product meets our department published specification for a period of twelve (12) months from date of shipment.
3. The graphs shown in this datasheet are representing typical data only and do not show guaranteed values.
4. When using this product, please observe the absolute maximum ratings and the instructions for using outlined in these specification sheets. Our department assumes no responsibility for any damage resulting from the use of the product which does not comply with the absolute maximum ratings and the instructions included in these specification sheets.
5. These specification sheets include materials protected under copyright of our department. Reproduction in any form is prohibited without obtaining our department ’s prior consent.
6. This product is not intended to be used for military, aircraft, automotive, medical, life sustaining or life saving applications or any other application which can result in human injury or death. Please contact authorized our department sales agent for special application request.