FEATURES

- **Output Voltage Range Adjustable From 1.25 V to 37 V**
- **Output Current Greater Than 500 mA**
- **Internal Short-Circuit Current Limiting**
- **Thermal-Overload Protection**
- **Output Safe-Area Compensation**
- **Q Devices Meet Automotive Performance Requirements**
- **Customer-Specific Configuration Control Can Be Supported for Q Devices Along With Major-Change Approval**

DCY PACKAGE
(TOP VIEW)

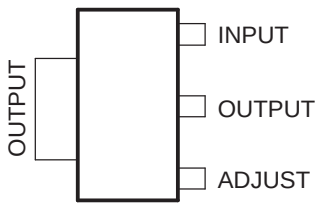

KTP PACKAGE
(TOP VIEW)

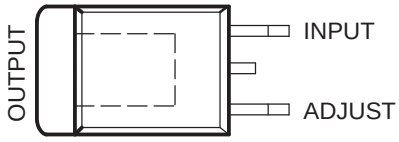

KVU (TO-252) PACKAGE
(TOP VIEW)

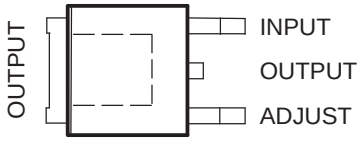

DESCRIPTION/ORDERING INFORMATION

The LM317M is an adjustable 3-terminal positive-voltage regulator capable of supplying more than 500 mA over an output-voltage range of 1.25 V to 37 V. The LM317M is exceptionally easy to use and requires only two external resistors to set the output voltage. Furthermore, both line and load regulation are better than standard fixed regulators.

In addition to having higher performance than fixed regulators, the device includes on-chip current limiting, thermal-overload protection, and safe-operating-area protection. All overload protection remains fully functional if the ADJUST terminal is disconnected.

Normally, no capacitors are needed unless the device is more than six inches from the input filter capacitors, in which case an input bypass capacitor is needed. An optional output capacitor can be added to improve transient response. The ADJUST terminal can be bypassed to achieve high ripple-rejection ratios, which are difficult to achieve with standard three-terminal regulators.

ORDERING INFORMATION

T_J	PACKAGE(1)		ORDERABLE PART NUMBER	TOP-SIDE MARKING
0°C to 125°C	PowerFLEX™ – KTP	Reel of 2000	LM317MKTPR	LM317M
	SOT – DCY	Tube of 80	LM317MDCY	L4
		Reel of 2500	LM317MDCYR	
	TO-252 – KVU	Reel of 2500	LM317MKVURG3	LM317M
–40°C to 125°C	PowerFLEX – KTP	Reel of 2000	LM317MQKTPR	317MQ
	SOT – DCY	Reel of 2500	LM317MQDCYR	L5
			LM317MQDCYRG3	L8

(1) Package drawings, standard packing quantities, thermal data, symbolization, and PCB design guidelines are available at www.ti.com/sc/package.

Please be aware that an important notice concerning availability, standard warranty, and use in critical applications of Texas Instruments semiconductor products and disclaimers thereto appears at the end of this data sheet.

PowerFLEX is a trademark of Texas Instruments.

PRODUCTION DATA information is current as of publication date. Products conform to specifications per the terms of the Texas Instruments standard warranty. Production processing does not necessarily include testing of all parameters.

Copyright © 2000–2006, Texas Instruments Incorporated

Absolute Maximum Ratings(1)

over operating temperature range (unless otherwise noted)

			MIN	MAX	UNIT
$V_I - V_O$	Input-to-output differential voltage			40	V
T_J	Operating virtual junction temperature			150	°C
	Lead temperature (within 5 mils of the plastic body for 10 s)	KTP, DCY packages		260	°C
T_{stg}	Storage temperature range		–65	150	°C

(1) Stresses beyond those listed under "absolute maximum ratings" may cause permanent damage to the device. These are stress ratings only, and functional operation of the device at these or any other conditions beyond those indicated under "recommended operating conditions" is not implied. Exposure to absolute-maximum-rated conditions for extended periods may affect device reliability.

Package Thermal Data(1)

PACKAGE	BOARD	θ_{JC}	θ_{JCB}	θ_{JA}
PowerFLEX (KTP)	High K, JESD 51-5		3°C/W	28°C/W
SOT-223 (DCY)	High K, JESD 51-7	30.6°C/W		53°C/W
TO-252 (KVU)	High K, JESD 51-5			30.3°C/W

(1) Maximum power dissipation is a function of $T_J(max)$, θ_{JA}, and T_A. The maximum allowable power dissipation at any allowable ambient temperature is $P_D = (T_J(max) - T_A)/\theta_{JA}$. Operating at the absolute maximum T_J of 150°C can affect reliability.

Recommended Operating Conditions

			MIN	MAX	UNIT
$V_I - V_O$	Input-to-output voltage differential			37	V
I_O	Output current			0.5	A
T_J	Operating virtual junction temperature	No suffix	0	125	°C
		Q suffix	–40	125	

Electrical Characteristics

over recommended operating virtual-junction temperature range, $V_I - V_O$ = 5 V, I_O = 0.1 A (unless otherwise noted)

PARAMETER	TEST CONDITIONS(1)		MIN	TYP	MAX	UNIT
Line regulation(2)	$V_I - V_O$ = 3 V to 40 V	T_J = 25°C		0.01	0.04	%/V
		Full temperature range		0.02	0.07	
Load regulation	I_O = 10 mA to 500 mA	T_J = 25°C		0.1	0.5	$\%V_O$
		Full temperature range		0.3	1.5	
ADJUST terminal current				50	100	µA
Change in ADJUST terminal current	$V_I - V_O$ = 3 V to 40 V,	I_O = 10 mA to 500 mA		0.2	5	µA
Reference voltage	$V_I - V_O$ = 3 V to 40 V,	I_O = 10 mA to 500 mA	1.2	1.25	1.3	V
Output-voltage temperature stability				0.7		%
Minimum load current to maintain regulation				3.5	10	mA
Maximum output current	$V_I - V_O \le$ 15 V		500	900		mA
	$V_I - V_O$ = 40 V, $P_D \le P_{D(max)}$,	T_J = 25°C	150	250		
RMS output noise voltage (% of V_O)	f = 10 Hz to 10 kHz,	T_J = 25°C		0.003		$\%V_O$
Ripple rejection	V_O = 10 V, f = 120 Hz, T_J = 25°C	C_{ADJ} = 0(3)		65		dB
		C_{ADJ} = 10 µF(3)	66	80		
Long-term stability	T_J = 25°C			0.3	1	%/1k hrs

(1) Pulse-testing techniques are used to maintain the junction temperature as close to the ambient temperature as possible.
(2) Line voltage regulation is expressed here as the percentage change in output voltage per 1-V change at the input.
(3) CADJ is connected between the ADJUST terminal and ground.

TYPICAL CHARACTERISTICS

LINE REGULATION vs TEMPERATURE

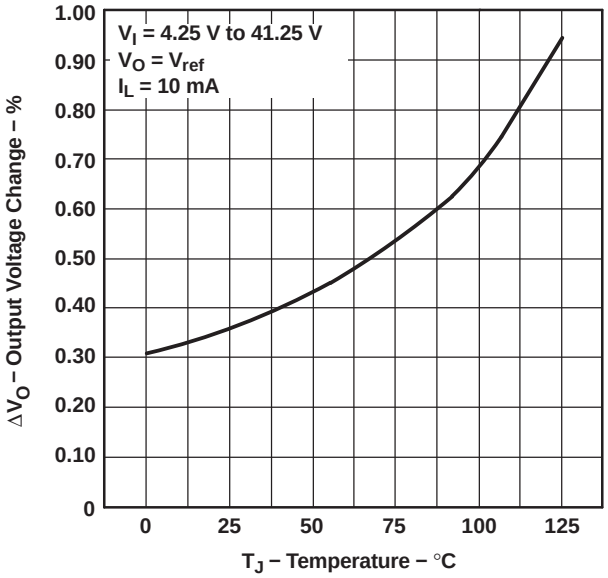

Figure 1.

LOAD REGULATION vs TEMPERATURE

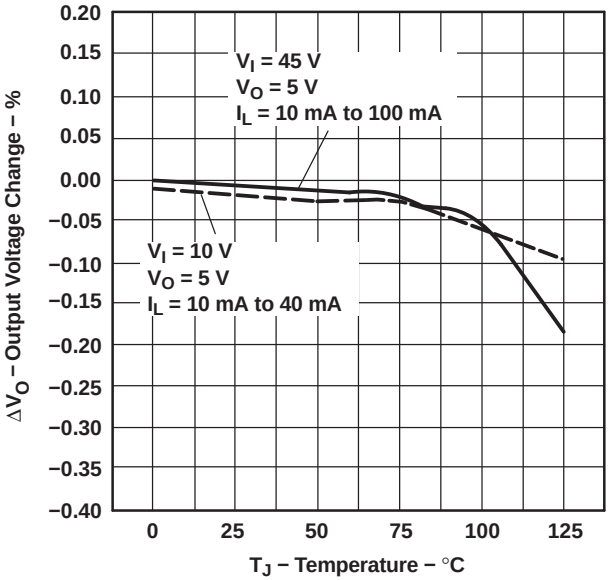

Figure 2.

ADJUST TERMINAL CURRENT vs TEMPERATURE

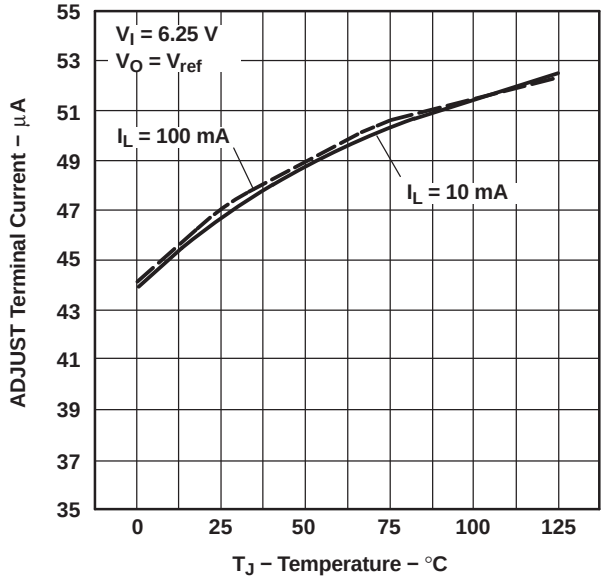

Figure 3.

TEMPERATURE STABILITY vs TEMPERATURE

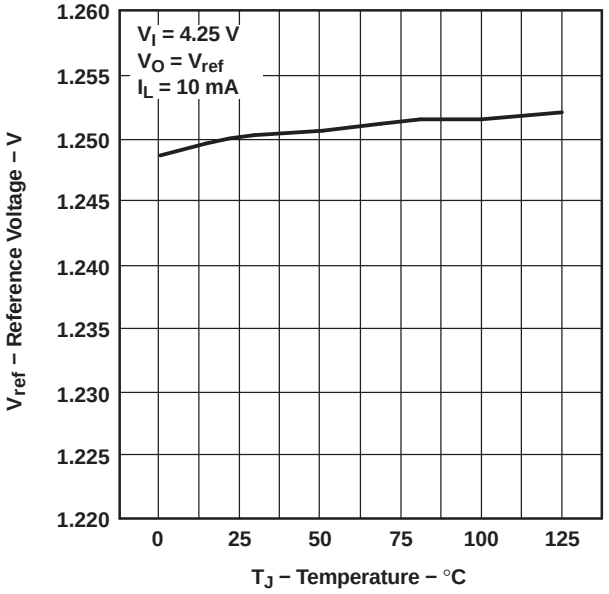

Figure 4.

TYPICAL CHARACTERISTICS (continued)

MINIMUM OPERATING CURRENT vs INPUT-OUTPUT DIFFERENTIAL VOLTAGE

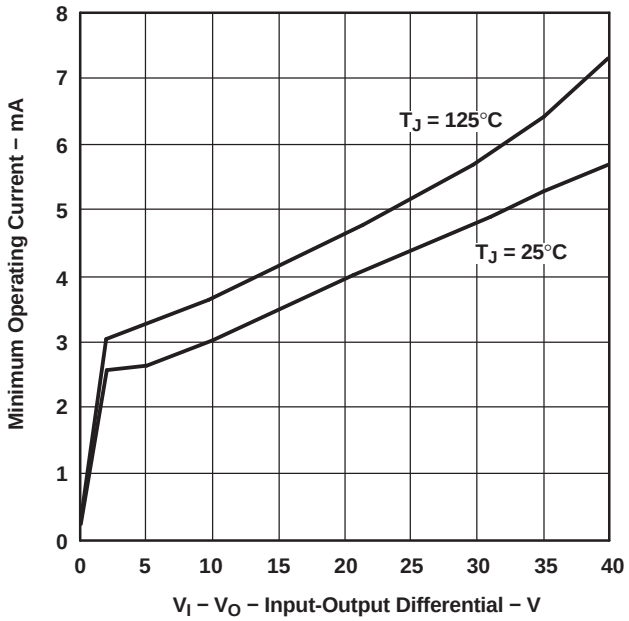

Figure 5.

OUTPUT CURRENT LIMIT vs INPUT-OUTPUT DIFFERENTIAL VOLTAGE

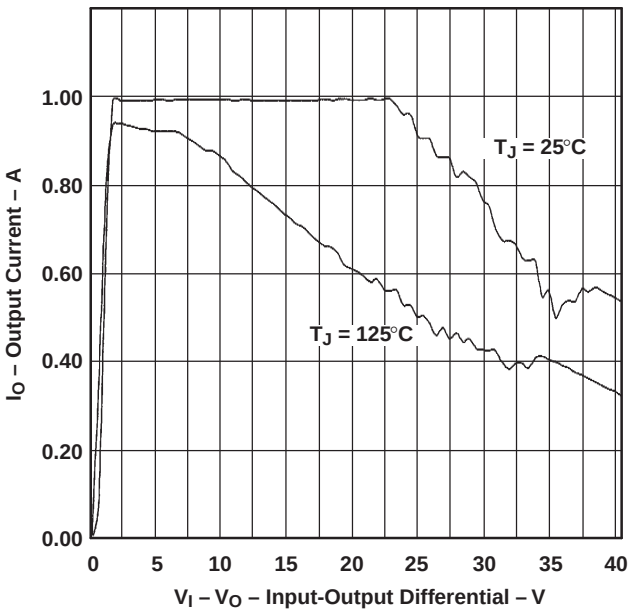

Figure 6.

OUTPUT NOISE VOLTAGE vs TEMPERATURE

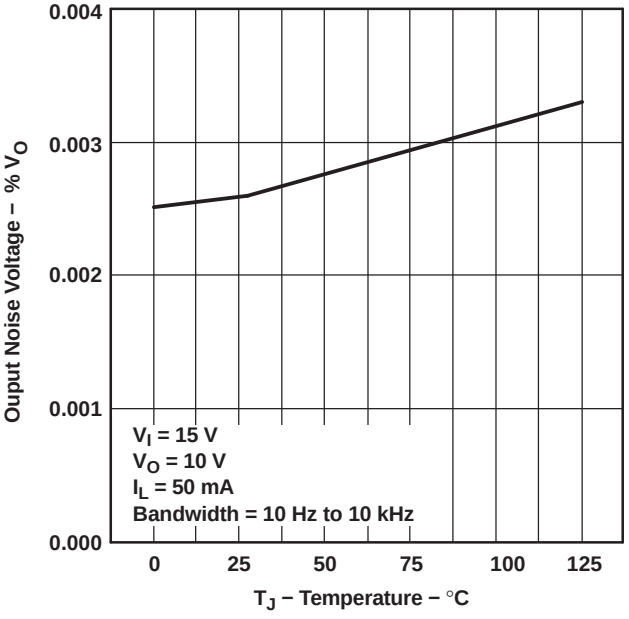

Figure 7.

RIPPLE REJECTION vs TEMPERATURE

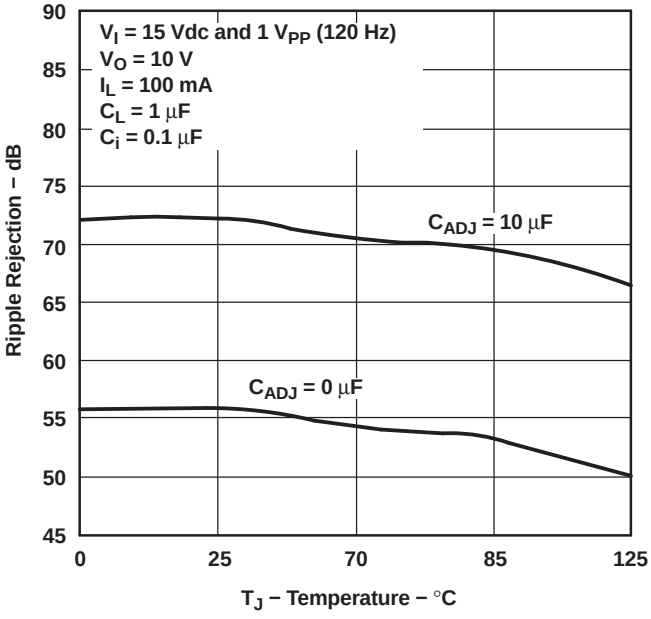

Figure 8.

TYPICAL CHARACTERISTICS (continued)

RIPPLE REJECTION
vs
FREQUENCY

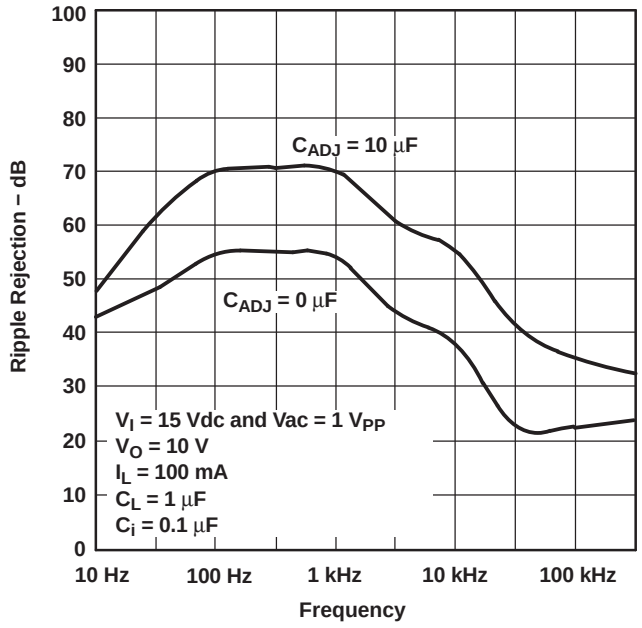

Figure 9.

INPUT-OUTPUT VOLTAGE DIFFERENTIAL
vs
TEMPERATURE

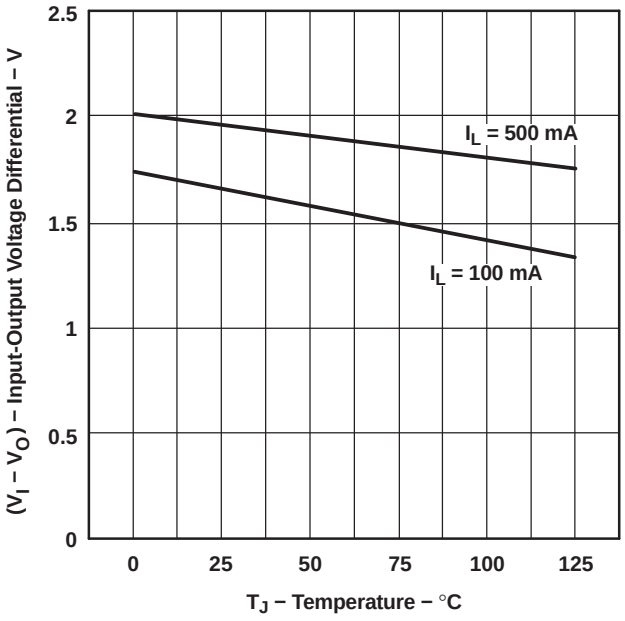

Figure 10.

OUTPUT IMPEDANCE
vs
FREQUENCY

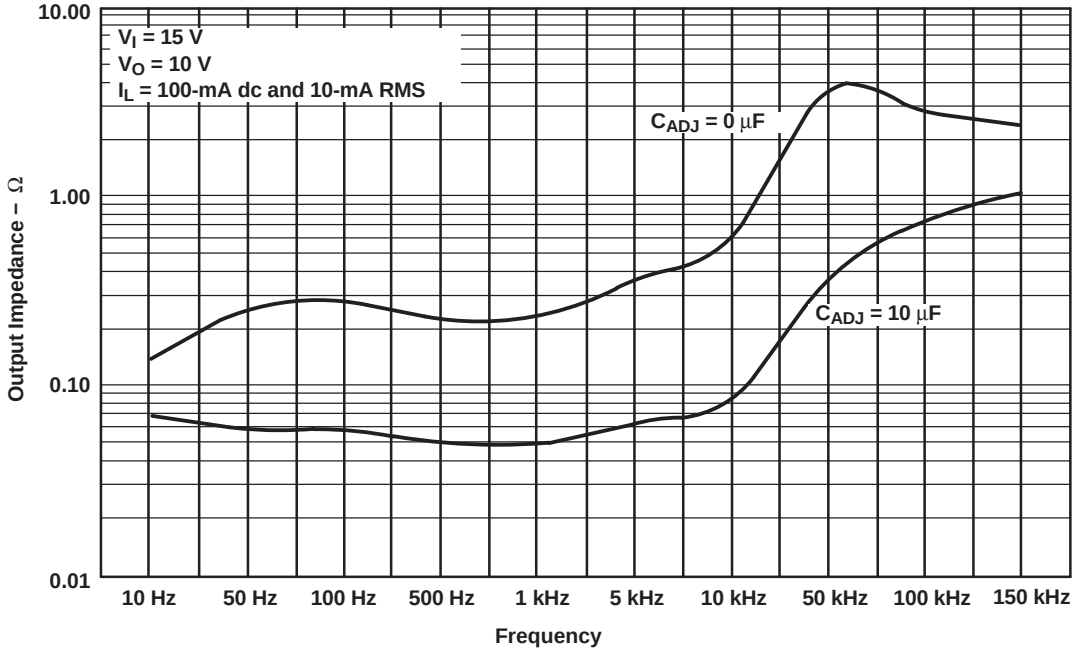

Figure 11.

TYPICAL CHARACTERISTICS (continued)

LINE TRANSIENT RESPONSE
vs
TIME

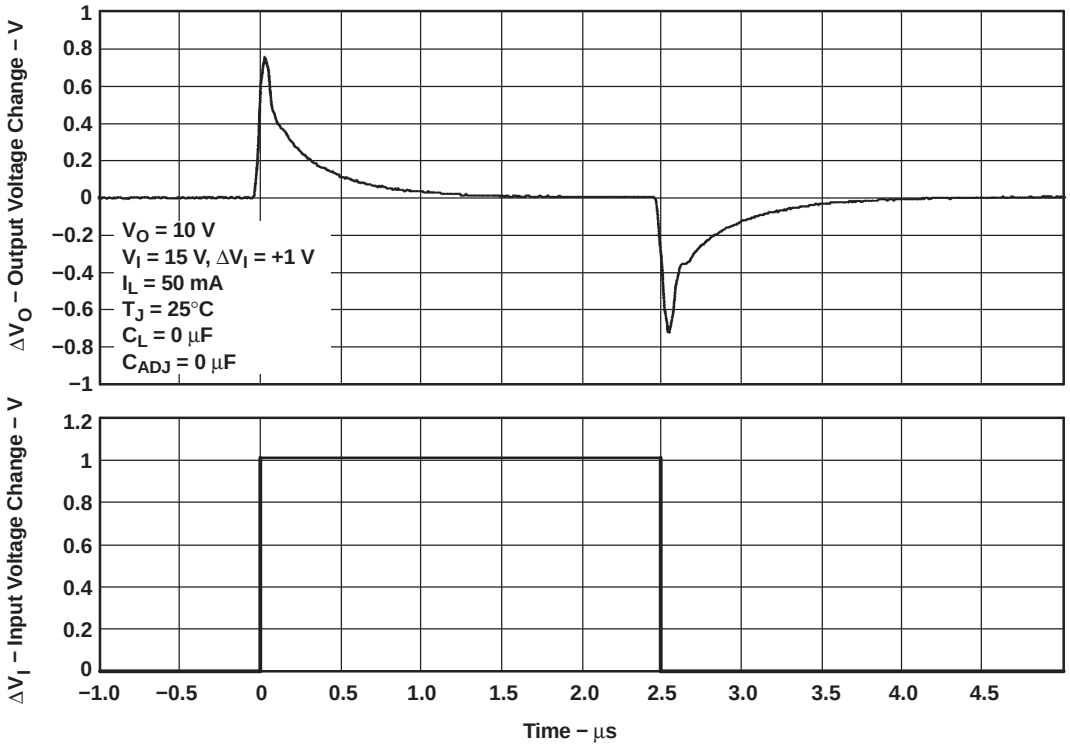

Figure 12.

LOAD TRANSIENT RESPONSE
vs
TIME

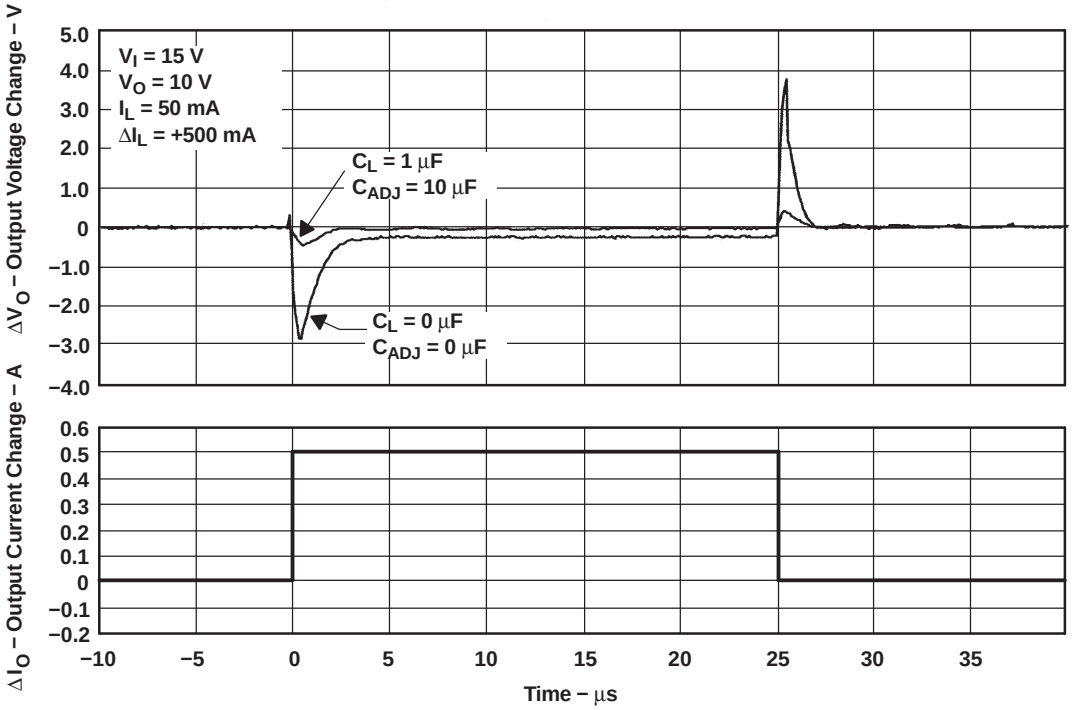

Figure 13.

APPLICATION INFORMATION

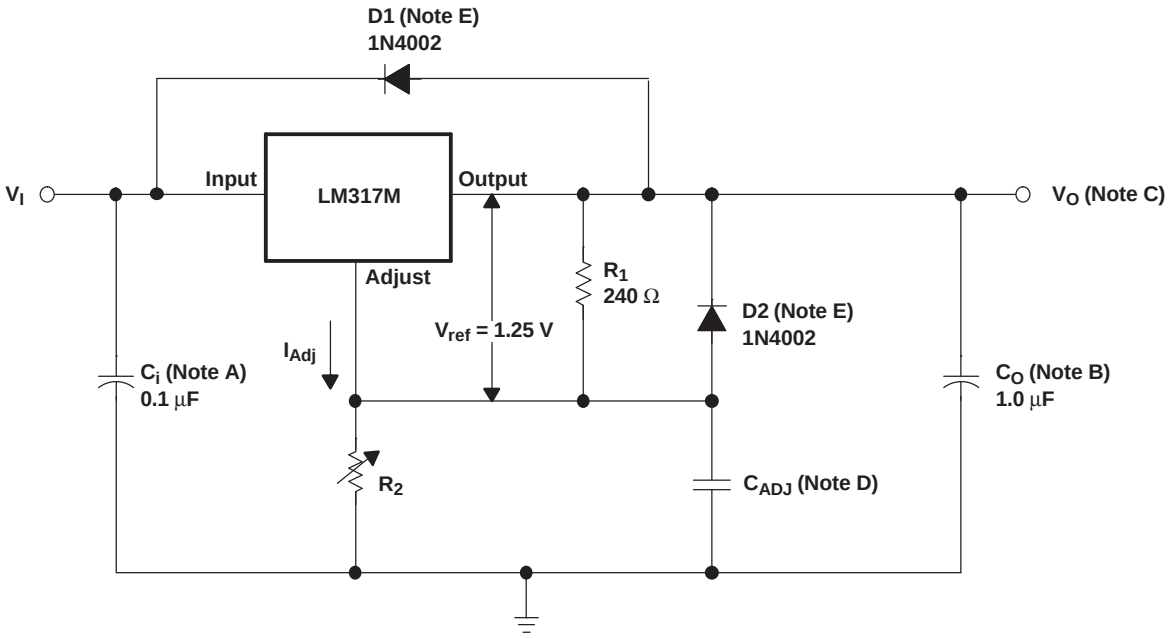

NOTES: A. C_i is not required, but is recommended, particularly if the regulator is not in close proximity to the power-supply filter capacitors. A 0.1-µF disc or 1-µF tantalum provides sufficient bypassing for most applications, especially when adjustment and output capacitors are used.

B. C_O improves transient response, but is not needed for stability.

C. V_O is calculated as shown:

$$V_O = V_{ref}\left(1 + \frac{R_2}{R_1}\right) + (I_{Adj} \times R_2)$$

Because I_{Adj} typically is 50 µA, it is negligible in most applications.

D. C_{ADJ} is used to improve ripple rejection; it prevents amplification of the ripple as the output voltage is adjusted higher. If C_{ADJ} is used, it is best to include protection diodes.

E. If the input is shorted to ground during a fault condition, protection diodes provide measures to prevent the possiblility of external capacitors discharging through low-impedance paths in the IC. By providing low-impedance discharge paths for C_O and C_{ADJ}, respectively, D1 and D2 prevent the capacitors from discharging into the output of the regulator.

Figure 14. Adjustable Voltage Regulator

PACKAGING INFORMATION

Orderable Device	Status (1)	Package Type	Package Drawing	Pins	Package Qty	Eco Plan (2)	Lead/Ball Finish	MSL Peak Temp (3)
LM317MDCY	ACTIVE	SOT-223	DCY	4	80	Green (RoHS & no Sb/Br)	CU SN	Level-2-260C-1YEAR
LM317MDCYG3	ACTIVE	SOT-223	DCY	4	80	Green (RoHS & no Sb/Br)	CU SN	Level-2-260C-1YEAR
LM317MDCYR	ACTIVE	SOT-223	DCY	4	2500	Green (RoHS & no Sb/Br)	CU SN	Level-2-260C-1YEAR
LM317MDCYRG3	ACTIVE	SOT-223	DCY	4	2500	Green (RoHS & no Sb/Br)	CU SN	Level-2-260C-1YEAR
LM317MKTPR	NRND	PFM	KTP	2	3000	TBD	CU SNPB	Level-1-220C-UNLIM
LM317MKTPRG3	NRND	PFM	KTP	2	3000	Green (RoHS & no Sb/Br)	CU SN	Level-1-260C-UNLIM
LM317MKVURG3	ACTIVE	PFM	KVU	3	2500	Green (RoHS & no Sb/Br)	CU SN	Level-3-260C-168 HR
LM317MQDCYR	ACTIVE	SOT-223	DCY	4	2500	TBD	SNPB	Level-2-235C-1 YEAR
LM317MQDCYRG3	ACTIVE	SOT-223	DCY	4	2500	Green (RoHS & no Sb/Br)	CU SN	Level-2-260C-1 YEAR

(1) The marketing status values are defined as follows:
ACTIVE: Product device recommended for new designs.
LIFEBUY: TI has announced that the device will be discontinued, and a lifetime-buy period is in effect.
NRND: Not recommended for new designs. Device is in production to support existing customers, but TI does not recommend using this part in a new design.
PREVIEW: Device has been announced but is not in production. Samples may or may not be available.
OBSOLETE: TI has discontinued the production of the device.

(2) Eco Plan - The planned eco-friendly classification: Pb-Free (RoHS), Pb-Free (RoHS Exempt), or Green (RoHS & no Sb/Br) - please check http://www.ti.com/productcontent for the latest availability information and additional product content details.
TBD: The Pb-Free/Green conversion plan has not been defined.
Pb-Free (RoHS): TI's terms "Lead-Free" or "Pb-Free" mean semiconductor products that are compatible with the current RoHS requirements for all 6 substances, including the requirement that lead not exceed 0.1% by weight in homogeneous materials. Where designed to be soldered at high temperatures, TI Pb-Free products are suitable for use in specified lead-free processes.
Pb-Free (RoHS Exempt): This component has a RoHS exemption for either 1) lead-based flip-chip solder bumps used between the die and package, or 2) lead-based die adhesive used between the die and leadframe. The component is otherwise considered Pb-Free (RoHS compatible) as defined above.
Green (RoHS & no Sb/Br): TI defines "Green" to mean Pb-Free (RoHS compatible), and free of Bromine (Br) and Antimony (Sb) based flame retardants (Br or Sb do not exceed 0.1% by weight in homogeneous material)

(3) MSL, Peak Temp. -- The Moisture Sensitivity Level rating according to the JEDEC industry standard classifications, and peak solder temperature.

Important Information and Disclaimer: The information provided on this page represents TI's knowledge and belief as of the date that it is provided. TI bases its knowledge and belief on information provided by third parties, and makes no representation or warranty as to the accuracy of such information. Efforts are underway to better integrate information from third parties. TI has taken and continues to take reasonable steps to provide representative and accurate information but may not have conducted destructive testing or chemical analysis on incoming materials and chemicals. TI and TI suppliers consider certain information to be proprietary, and thus CAS numbers and other limited information may not be available for release.

In no event shall TI's liability arising out of such information exceed the total purchase price of the TI part(s) at issue in this document sold by TI to Customer on an annual basis.

MPDS094A – APRIL 2001 – REVISED JUNE 2002

DCY (R-PDSO-G4) **PLASTIC SMALL-OUTLINE**

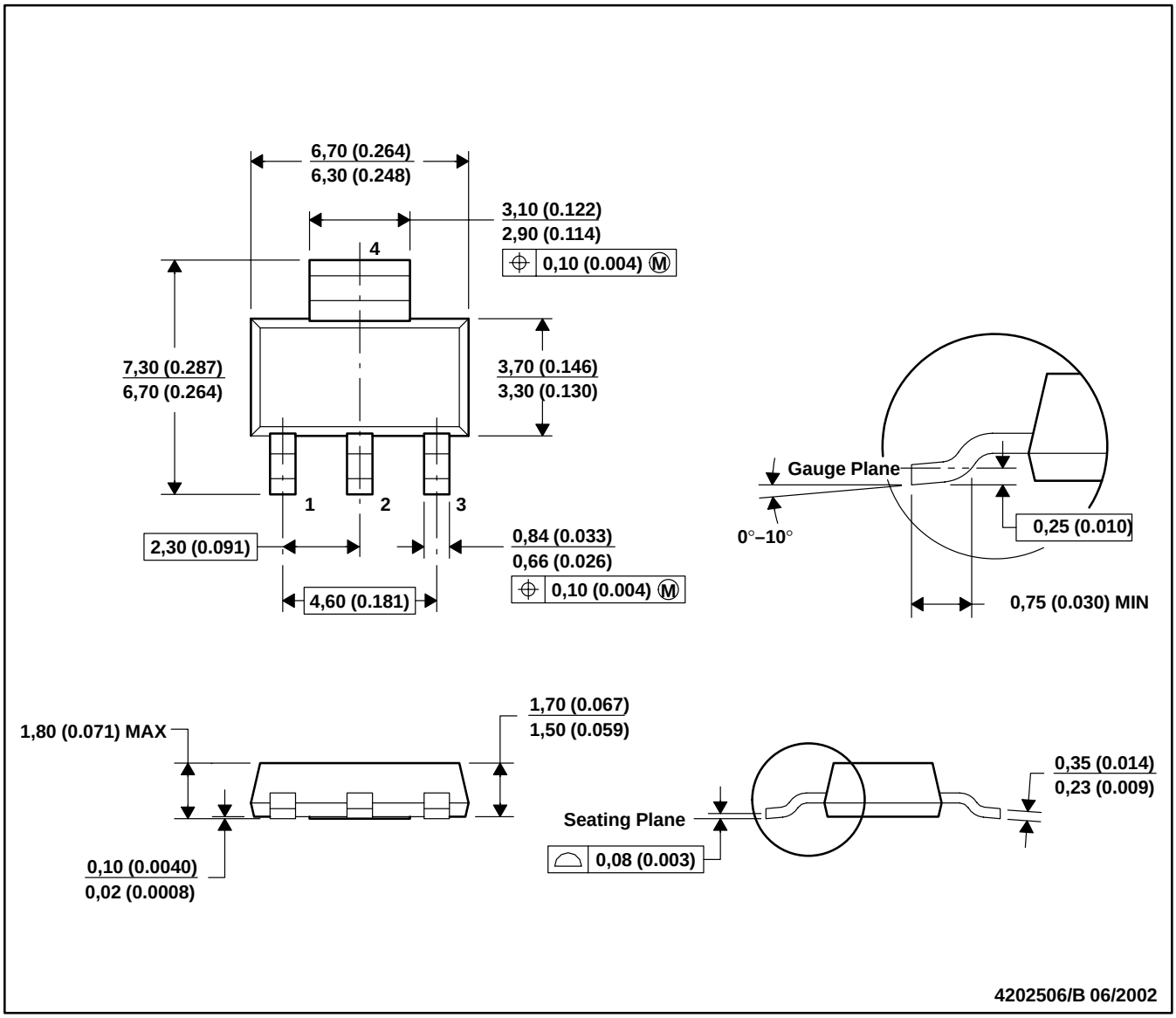

NOTES: A. All linear dimensions are in millimeters (inches).
B. This drawing is subject to change without notice.
C. Body dimensions do not include mold flash or protrusion.
D. Falls within JEDEC TO-261 Variation AA.

MPSF001F – JANUARY 1996 – REVISED JANUARY 2002

KTP (R-PSFM-G2) **PowerFLEX™ PLASTIC FLANGE-MOUNT PACKAGE**

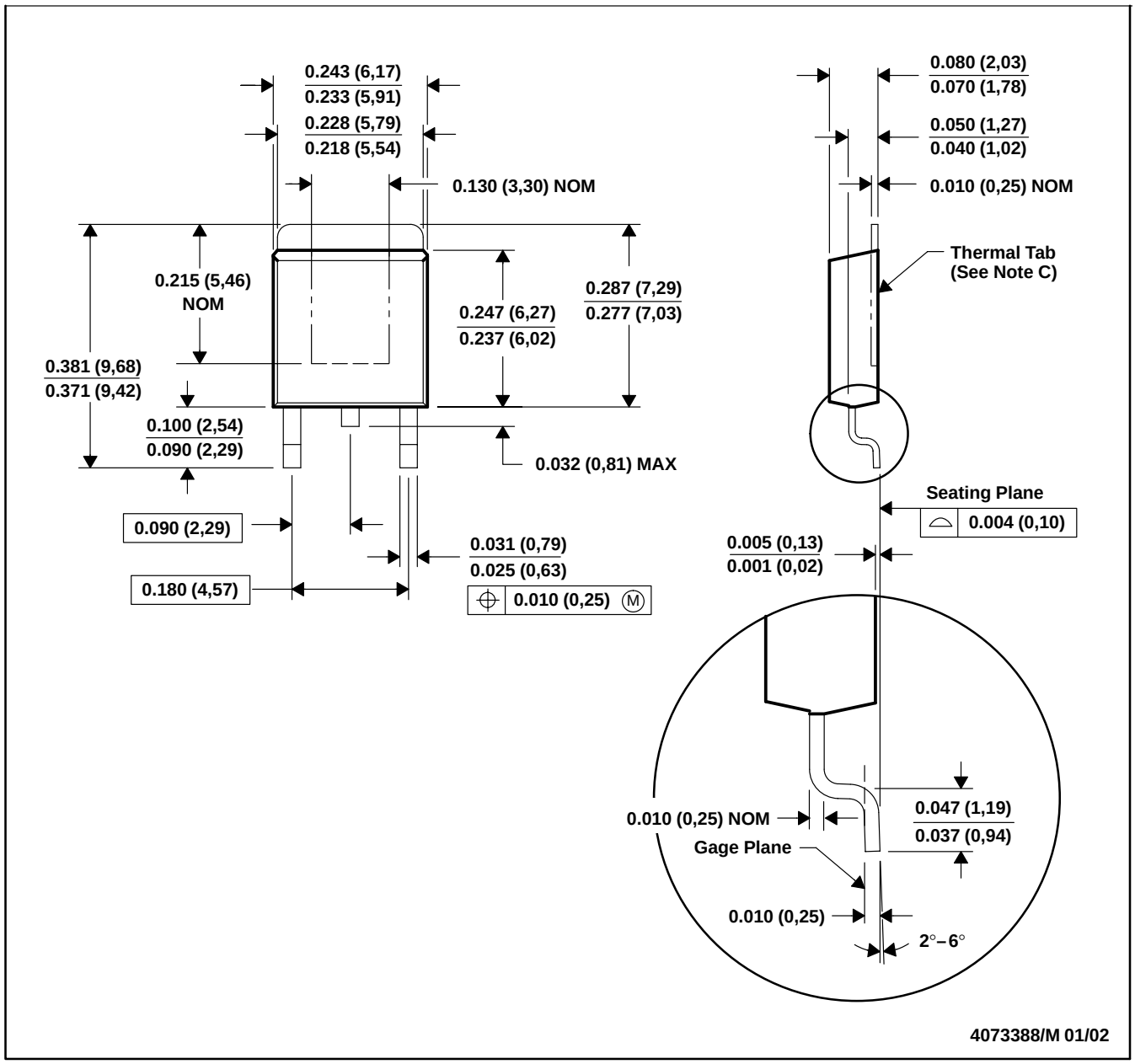

NOTES: A. All linear dimensions are in inches (millimeters).
B. This drawing is subject to change without notice.
C. The center lead is in electrical contact with the thermal tab.
D. Dimensions do not include mold protrusions, not to exceed 0.006 (0,15).
E. Falls within JEDEC TO-252 variation AC.

PowerFLEX is a trademark of Texas Instruments.

KVU (R–PSFM–G3) PLASTIC FLANGE–MOUNT PACKAGE

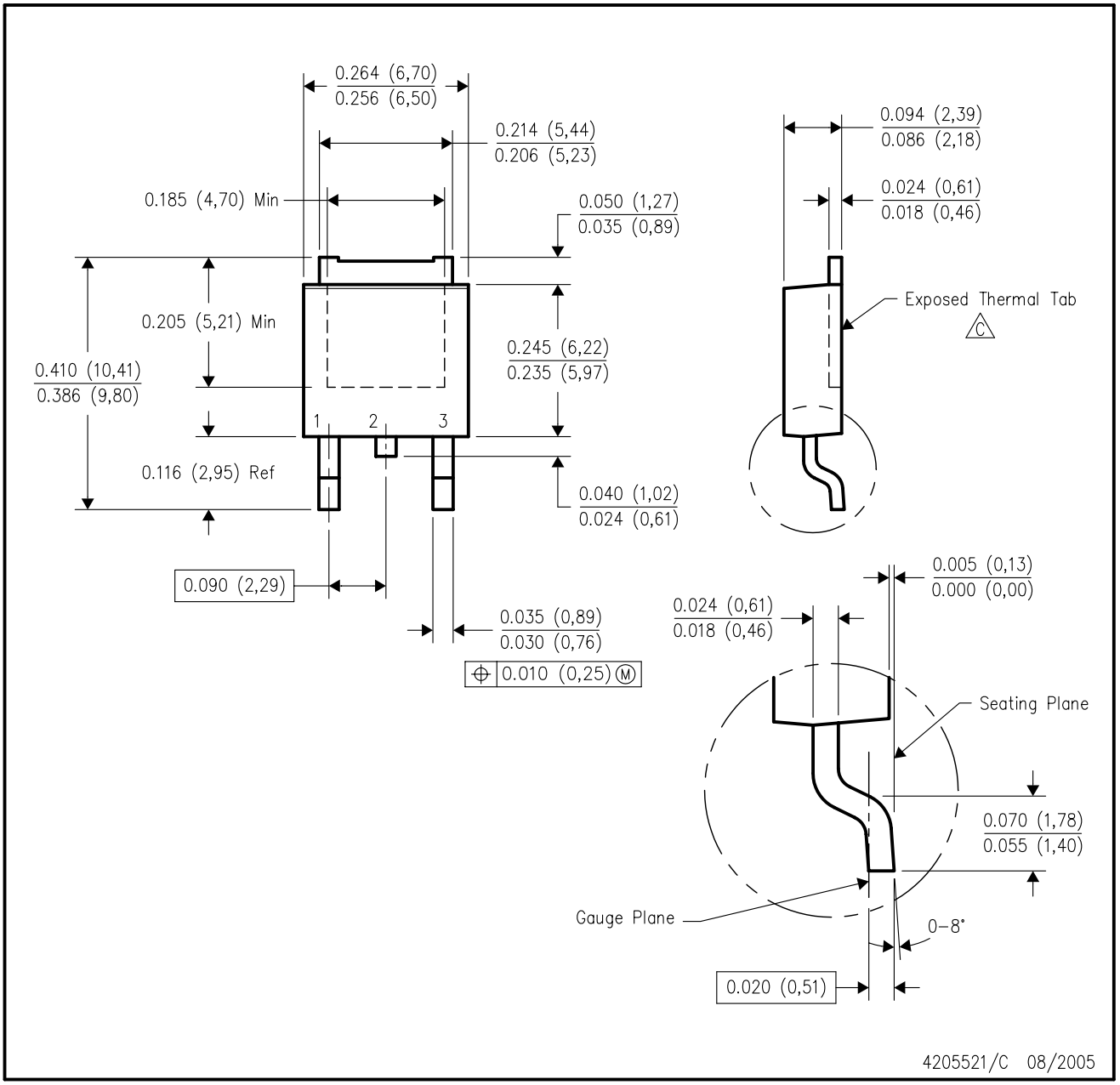

NOTES:
A. All linear dimensions are in inches (millimeters).
B. This drawing is subject to change without notice.
C. The center lead is in electrical contact with the exposed thermal tab.
D. Body Dimensions do not include mold flash or protrusions. Mold flash and protrusion shall not exceed 0.006 (0,15) per side.
E. Falls within JEDEC TO–252 variation AA.

IMPORTANT NOTICE

Texas Instruments Incorporated and its subsidiaries (TI) reserve the right to make corrections, modifications, enhancements, improvements, and other changes to its products and services at any time and to discontinue any product or service without notice. Customers should obtain the latest relevant information before placing orders and should verify that such information is current and complete. All products are sold subject to TI's terms and conditions of sale supplied at the time of order acknowledgment.

TI warrants performance of its hardware products to the specifications applicable at the time of sale in accordance with TI's standard warranty. Testing and other quality control techniques are used to the extent TI deems necessary to support this warranty. Except where mandated by government requirements, testing of all parameters of each product is not necessarily performed.

TI assumes no liability for applications assistance or customer product design. Customers are responsible for their products and applications using TI components. To minimize the risks associated with customer products and applications, customers should provide adequate design and operating safeguards.

TI does not warrant or represent that any license, either express or implied, is granted under any TI patent right, copyright, mask work right, or other TI intellectual property right relating to any combination, machine, or process in which TI products or services are used. Information published by TI regarding third-party products or services does not constitute a license from TI to use such products or services or a warranty or endorsement thereof. Use of such information may require a license from a third party under the patents or other intellectual property of the third party, or a license from TI under the patents or other intellectual property of TI.

Reproduction of information in TI data books or data sheets is permissible only if reproduction is without alteration and is accompanied by all associated warranties, conditions, limitations, and notices. Reproduction of this information with alteration is an unfair and deceptive business practice. TI is not responsible or liable for such altered documentation.

Resale of TI products or services with statements different from or beyond the parameters stated by TI for that product or service voids all express and any implied warranties for the associated TI product or service and is an unfair and deceptive business practice. TI is not responsible or liable for any such statements.

Following are URLs where you can obtain information on other Texas Instruments products and application solutions:

Products		**Applications**	
Amplifiers	amplifier.ti.com	Audio	www.ti.com/audio
Data Converters	dataconverter.ti.com	Automotive	www.ti.com/automotive
DSP	dsp.ti.com	Broadband	www.ti.com/broadband
Interface	interface.ti.com	Digital Control	www.ti.com/digitalcontrol
Logic	logic.ti.com	Military	www.ti.com/military
Power Mgmt	power.ti.com	Optical Networking	www.ti.com/opticalnetwork
Microcontrollers	microcontroller.ti.com	Security	www.ti.com/security
Low Power Wireless	www.ti.com/lpw	Telephony	www.ti.com/telephony
		Video & Imaging	www.ti.com/video
		Wireless	www.ti.com/wireless

Mailing Address: Texas Instruments
Post Office Box 655303 Dallas, Texas 75265

Copyright © 2006, Texas Instruments Incorporated