Small Signal Schottky Diodes, Single and Dual



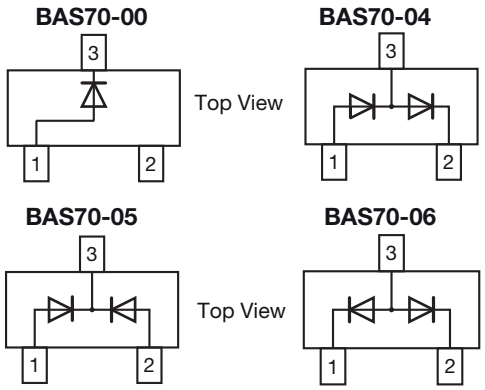

FEATURES

- These diodes feature very low turn-on voltage and fast switching
- These devices are protected by a PN junction guard ring against excessive voltage, such as electrostatic discharges
- AEC-Q101 qualified
- Base P/N-E3 - RoHS-compliant, commercial grade
- Base P/N-HE3 - RoHS-compliant, AEC-Q101 qualified
- Material categorization: For definitions of compliance please see www.vishay.com/doc?99912

Pb-free

e3

RoHS COMPLIANT

MECHANICAL DATA

Case: SOT-23

Weight: approx. 8.8 mg

Packaging codes/options:

18/10K per 13" reel (8 mm tape), 10K/box

08/3K per 7" reel (8 mm tape), 15K/box

PARTS TABLE

PART	ORDERING CODE	INTERNAL CONSTRUCTION	TYPE MARKING	REMARKS
BAS70-00	BAS70-00-E3-08 or BAS70-00-E3-18	Single diode	73	Tape and reel
	BAS70-00-HE3-08 or BAS70-00-HE3-18			
BAS70-04	BAS70-04-E3-08 or BAS70-04-E3-18	Dual diodes serial	74	
	BAS70-04-HE3-08 or BAS70-04-HE3-18			
BAS70-05	BAS70-05-E3-08 or BAS70-05-E3-18	Dual diodes common cathode	75	
	BAS70-05-HE3-08 or BAS70-05-HE3-18			
BAS70-06	BAS70-06-E3-08 or BAS70-06-E3-18	Dual diodes common anode	76	
	BAS70-06-HE3-08 or BAS70-06-HE3-18			

ABSOLUTE MAXIMUM RATINGS (T_{amb} = 25 °C, unless otherwise specified)

PARAMETER	TEST CONDITION	SYMBOL	VALUE	UNIT
Repetitive peak reverse voltage		$V_{RRM} = V_{RRM} = V_R$	70	V
Forward continuous current (1)		I_F	200	mA
Surge forward current (1)	$t_p < 1$ s	I_{FSM}	600	mA
Power dissipation (1)		P_{tot}	200	mW

Note

(1) Device on fiberglass substrate, see layout on next page.

THERMAL CHARACTERISTICS (T_{amb} = 25 °C, unless otherwise specified)

PARAMETER	TEST CONDITION	SYMBOL	VALUE	UNIT
Thermal resistance junction to ambient air (1)		R_{thJA}	500	K/W
Junction temperature		T_j	125	°C
Storage temperature range		T_{stg}	- 65 to + 150	°C
Operating temperature range		T_{op}	- 55 to + 125	°C

Note

(1) Device on fiberglass substrate, see layout on next page.

For technical questions within your region: DiodesAmericas@vishay.com, DiodesAsia@vishay.com, DiodesEurope@vishay.com

THIS DOCUMENT IS SUBJECT TO CHANGE WITHOUT NOTICE. THE PRODUCTS DESCRIBED HEREIN AND THIS DOCUMENT ARE SUBJECT TO SPECIFIC DISCLAIMERS, SET FORTH AT www.vishay.com/doc?91000

ELECTRICAL CHARACTERISTICS (T_{amb} = 25 °C, unless otherwise specified)						
PARAMETER	**TEST CONDITION**	**SYMBOL**	**MIN.**	**TYP.**	**MAX.**	**UNIT**
Reserve beakdown voltage	I_R = 10 µA (pulsed)	$V_{(BR)}$	70			V
Leakage current	V_R = 50 V	I_R		20	100	nA
Forward voltage	I_F = 1.0 mA	V_F			410	mV
Forward voltage (1)	I_F = 15 mA	V_F			1000	mV
Diode capacitance	V_R = 0 V, f = 1 MHz	C_D		1.5	2	pF
Reserve recovery time	I_F = I_R = 10 mA, i_R = 1 mA, R_L = 100 Ω	t_{rr}			5	ns

Note

(1) Pulse test; $t_p \leq 300$ µs

LAYOUT FOR R_{thJA} TEST

Thickness:
Fiberglass 1.5 mm (0.059")
Copper leads 0.3 mm (0.012")

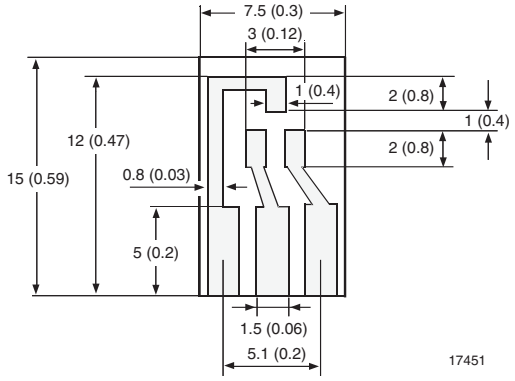

PACKAGE DIMENSIONS in millimeters (inches): SOT-23

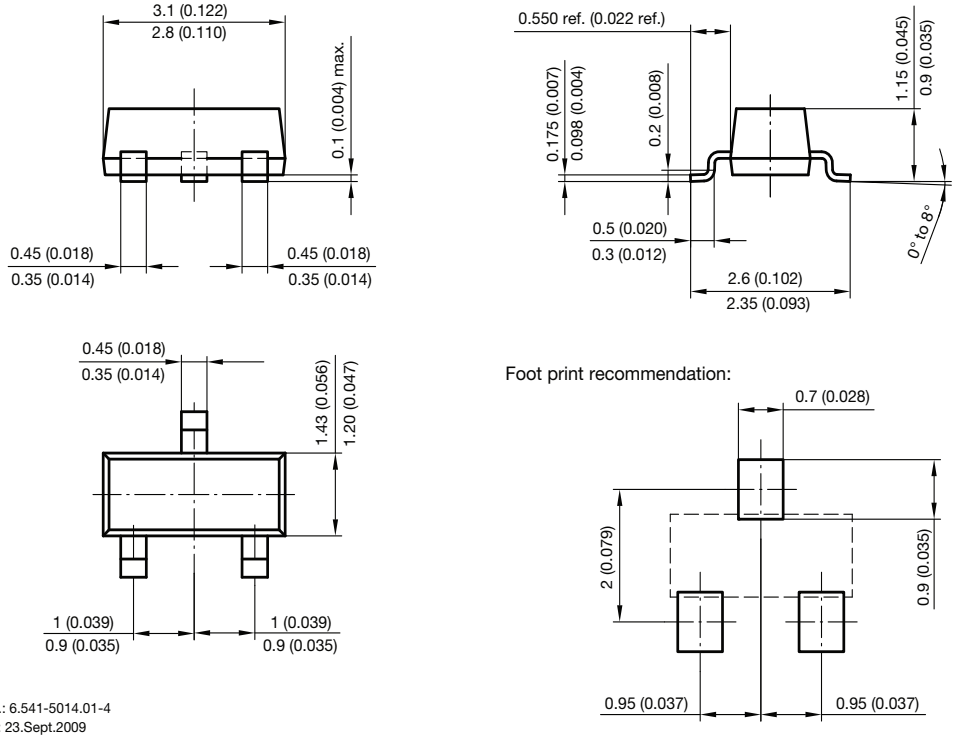

Document no.: 6.541-5014.01-4
Rev. 8 - Date: 23.Sept.2009
17418

For technical questions within your region: DiodesAmericas@vishay.com, DiodesAsia@vishay.com, DiodesEurope@vishay.com

THIS DOCUMENT IS SUBJECT TO CHANGE WITHOUT NOTICE. THE PRODUCTS DESCRIBED HEREIN AND THIS DOCUMENT ARE SUBJECT TO SPECIFIC DISCLAIMERS, SET FORTH AT www.vishay.com/doc?91000

Disclaimer

ALL PRODUCT, PRODUCT SPECIFICATIONS AND DATA ARE SUBJECT TO CHANGE WITHOUT NOTICE TO IMPROVE RELIABILITY, FUNCTION OR DESIGN OR OTHERWISE.

Vishay Intertechnology, Inc., its affiliates, agents, and employees, and all persons acting on its or their behalf (collectively, “Vishay”), disclaim any and all liability for any errors, inaccuracies or incompleteness contained in any datasheet or in any other disclosure relating to any product.

Vishay makes no warranty, representation or guarantee regarding the suitability of the products for any particular purpose or the continuing production of any product. To the maximum extent permitted by applicable law, Vishay disclaims (i) any and all liability arising out of the application or use of any product, (ii) any and all liability, including without limitation special, consequential or incidental damages, and (iii) any and all implied warranties, including warranties of fitness for particular purpose, non-infringement and merchantability.

Statements regarding the suitability of products for certain types of applications are based on Vishay’s knowledge of typical requirements that are often placed on Vishay products in generic applications. Such statements are not binding statements about the suitability of products for a particular application. It is the customer’s responsibility to validate that a particular product with the properties described in the product specification is suitable for use in a particular application. Parameters provided in datasheets and / or specifications may vary in different applications and performance may vary over time. All operating parameters, including typical parameters, must be validated for each customer application by the customer’s technical experts. Product specifications do not expand or otherwise modify Vishay’s terms and conditions of purchase, including but not limited to the warranty expressed therein.

Except as expressly indicated in writing, Vishay products are not designed for use in medical, life-saving, or life-sustaining applications or for any other application in which the failure of the Vishay product could result in personal injury or death. Customers using or selling Vishay products not expressly indicated for use in such applications do so at their own risk. Please contact authorized Vishay personnel to obtain written terms and conditions regarding products designed for such applications.

No license, express or implied, by estoppel or otherwise, to any intellectual property rights is granted by this document or by any conduct of Vishay. Product names and markings noted herein may be trademarks of their respective owners.