HIGH-SPEED DIFFERENTIAL LINE DRIVERS

FEATURES

- **Meet or Exceed the Requirements of ANSI TIA/EIA-644 Standard**
- **Low-Voltage Differential Signaling With Typical Output Voltage of 350 mV and 100-Ω Load**
- **Typical Output Voltage Rise and Fall Times of 500 ps (400 Mbps)**
- **Typical Propagation Delay Times of 1.7 ns**
- **Operate From a Single 3.3-V Supply**
- **Power Dissipation 25 mW Typical Per Driver at 200 MHz**
- **Driver at High Impedance When Disabled or With V_{CC} = 0**
- **Bus-Terminal ESD Protection Exceeds 8 kV**
- **Low-Voltage TTL (LVTTL) Logic Input Levels**
- **Pin Compatible With AM26LS31, MC3487, and µA9638**

DESCRIPTION

The SN55LVDS31, SN65LVDS31, SN65LVDS3487, and SN65LVDS9638 are differential line drivers that implement the electrical characteristics of low-voltage differential signaling (LVDS). This signaling technique lowers the output voltage levels of 5-V differential standard levels (such as TIA/EIA-422B) to reduce the power, increase the switching speeds, and allow operation with a 3.3-V supply rail. Any of the four current-mode drivers will deliver a minimum differential output voltage magnitude of 247 mV into a 100-Ω load when enabled.

The intended application of these devices and signaling technique is both point-to-point and multidrop (one driver and multiple receivers) data transmission over controlled impedance media of approximately 100 Ω. The transmission media may be printed-circuit board traces, backplanes, or cables. The ultimate rate and distance of data transfer is dependent upon the attenuation characteristics of the media and the noise coupling to the environment.

The SN65LVDS31, SN65LVDS3487, and SN65LVDS9638 are characterized for operation from –40°C to 85°C. The SN55LVDS31 is characterized for operation from –55°C to 125°C.

SN55LVDS31 . . . J OR W
SN65LVDS31 . . . D OR PW
(Marked as **LVDS31** or **65LVDS31**)
(TOP VIEW)

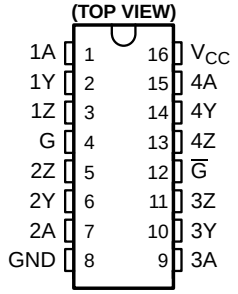

SN55LVDS31FK
(TOP VIEW)

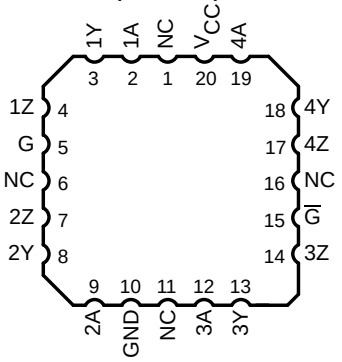

SN65LVDS3487D
(Marked as **LVDS3487** or **65LVDS3487**)
(TOP VIEW)

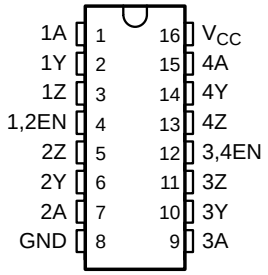

SN65LVDS9638D (Marked as **DK638** or **LVDS38**)
SN65LVDS9638DGN (Marked as **L38**)
SN65LVDS9638DGK (Marked as **AXG**)
(TOP VIEW)

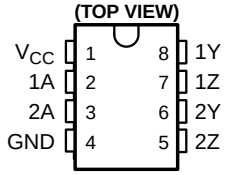

Please be aware that an important notice concerning availability, standard warranty, and use in critical applications of Texas Instruments semiconductor products and disclaimers thereto appears at the end of this data sheet.

PowerPAD is a trademark of Texas Instruments.

PRODUCTION DATA information is current as of publication date. Products conform to specifications per the terms of the Texas Instruments standard warranty. Production processing does not necessarily include testing of all parameters.

Copyright © 1997–2004, Texas Instruments Incorporated

These devices have limited built-in ESD protection. The leads should be shorted together or the device placed in conductive foam during storage or handling to prevent electrostatic damage to the MOS gates.

AVAILABLE OPTIONS

T_A	PACKAGE					
	SMALL OUTLINE		MSOP	CHIP CARRIER (FK)	CERAMIC DIP (J)	FLAT PACK (W)
	(D)	(PW)				
–40°C to 85°C	SN65LVDS31D	SN65LVDS31PW	—	—	—	—
	SN65LVDS3487D	—	—	—	—	—
	SN65LVDS9638D	—	SN65LVDS9638DGN	—	—	—
	—	—	SN65LVDS9638DGK	—	—	—
–55°C to 125°C	—	—	—	SNJ55LVDS31FK	SNJ55LVDS31J	SNJ55LVDS31W SN55LVDS31W

logic symbol†

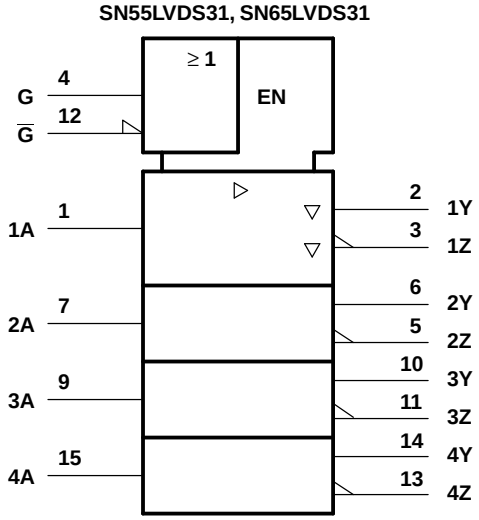

† This symbol is in accordance with ANSI/IEEE Std 91-1984 and IEC Publication 617-12.

’LVDS31 logic diagram (positive logic)

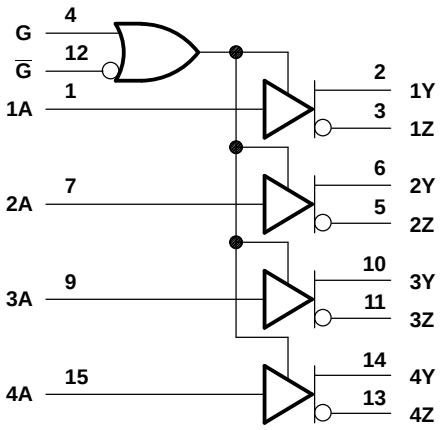

logic symbol†

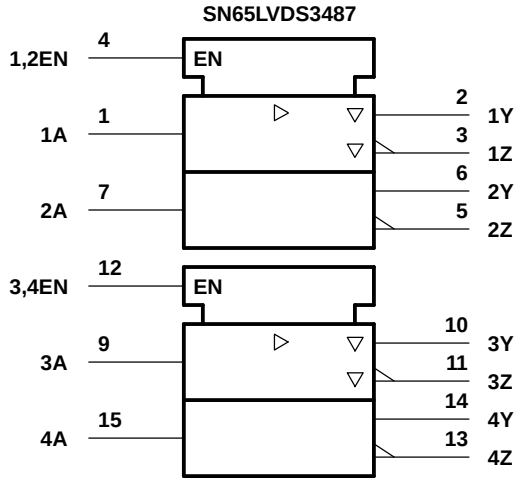

† This symbol is in accordance with ANSI/IEEE Std 91-1984 and IEC Publication 617-12.

SN65LVDS3487 logic diagram (positive logic)

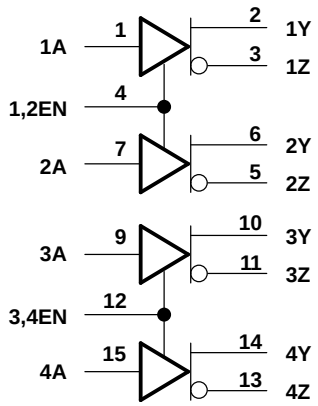

logic symbol†

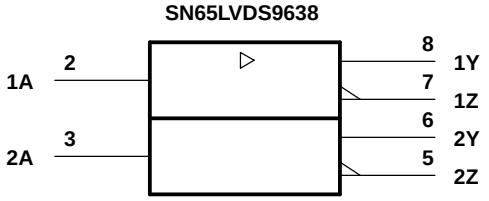

† This symbol is in accordance with ANSI/IEEE Std 91-1984 and IEC Publication 617-12.

SN65LVDS9638 logic diagram (positive logic)

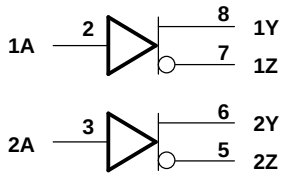

FUNCTION TABLES

SN55LVDS31, SN65LVDS31 (1)

INPUT A	ENABLES		OUTPUTS	
	G	G	Y	Z
H	H	X	H	L
L	H	X	L	H
H	X	L	H	L
L	X	L	L	H
X	L	H	Z	Z
Open	H	X	L	H
Open	X	L	L	H

(1) H = high level, L = low level, X = irrelevant, Z = high impedance (off)

SN65LVDS3487 (1)

INPUT A	ENABLE EN	OUTPUTS	
		Y	Z
H	H	H	L
L	H	L	H
X	L	Z	Z
Open	H	L	H

(1) H = high level, L = low level, X = irrelevant, Z = high impedance (off)

SN65LVDS9638 (1)

INPUT A	OUTPUTS	
	Y	Z
H	H	L
L	L	H
Open	L	H

(1) H = high level, L = low level

EQUIVALENT INPUT AND OUTPUT SCHEMATIC DIAGRAMS

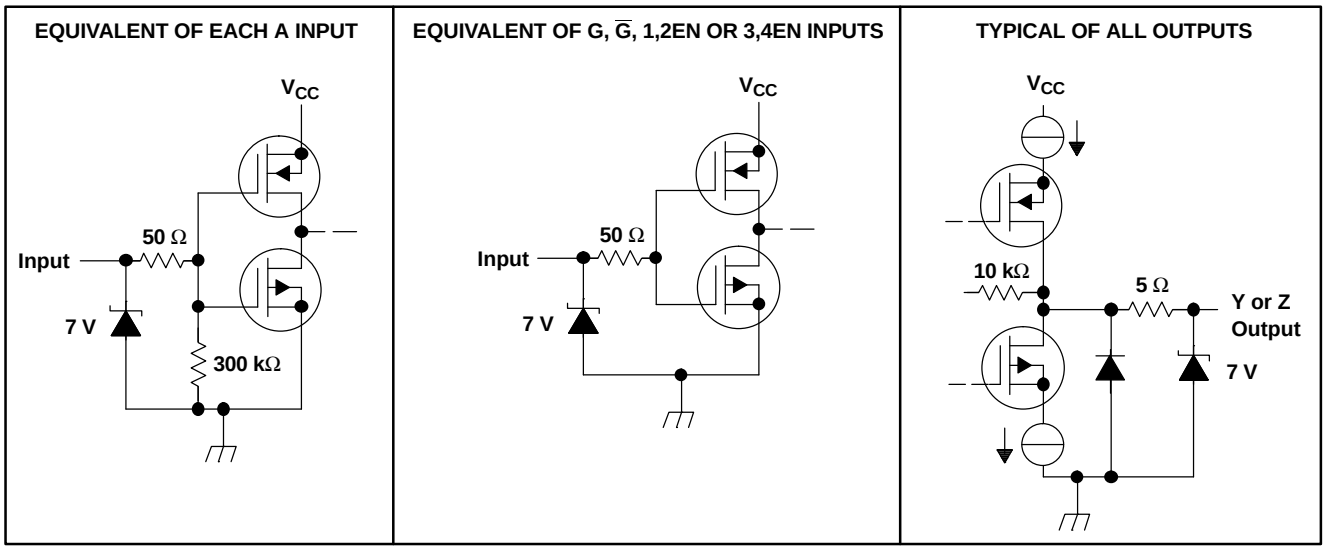

ABSOLUTE MAXIMUM RATINGS[1]

over operating free-air temperature range (unless otherwise noted)

		UNIT
V_{CC}	Supply voltage range[2]	–0.5 V to 4 V
V_I	Input voltage range	–0.5 V to V_{CC} + 0.5 V
	Continuous total power dissipation	See Dissipation Rating Table
	Lead temperature 1,6 mm (1/16 inch) from case for 10 seconds	260°C
T_{stg}	Storage temperature range	–65°C to 150°C

(1) Stresses beyond those listed under *absolute maximum ratings* may cause permanent damage to the device. These are stress ratings only, and functional operation of the device at these or any other conditions beyond those indicated under *recommended operating conditions* is not implied. Exposure to absolute-maximum-rated conditions for extended periods may affect device reliability.
(2) All voltages, except differential I/O bus voltages, are with respect to the network ground terminal.

DISSIPATION RATING TABLE

PACKAGE	$T_A \leq 25°C$ POWER RATING	DERATING FACTOR[1] ABOVE $T_A = 25°C$	$T_A = 70°C$ POWER RATING	$T_A = 85°C$ POWER RATING	$T_A = 125°C$ POWER RATING
D (8)	725 mW	5.8 mW/°C	464 mW	377 mW	—
D (16)	950 mW	7.6 mW/°C	608 mW	494 mW	—
DGK	425 mW	3.4 mW/°C	272 mW	221 mW	—
DGN[2]	2.14 W	17.1 mW/°C	1.37 W	1.11 W	—
FK	1375 mW	11.0 mW/°C	880 mW	715 mW	275 mW
J	1375 mW	11.0 mW/°C	880 mW	715 mW	275 mW
PW (16)	774 mW	6.2 mW/°C	496 mW	402 mW	—
W	1000 mW	8.0 mW/°C	640 mW	520 mW	200 mW

(1) This is the inverse of the junction-to-ambient thermal resistance when board-mounted and with no air flow.
(2) The PowerPAD™ must be soldered to a thermal land on the printed-circuit board. See the application note *PowerPAD Thermally Enhanced Package* (SLMA002).

RECOMMENDED OPERATING CONDITIONS

			MIN	NOM	MAX	UNIT
V_{CC}	Supply voltage		3	3.3	3.6	V
V_{IH}	High-level input voltage		2			V
V_{IL}	Low-level input voltage				0.8	V
T_A	Operating free-air temperature	SN65 prefix	–40		85	°C
		SN55 prefix	–55		125	

SN55LVDS31 ELECTRICAL CHARACTERISTICS

over operating free-air temperature range (unless otherwise noted)

PARAMETER		TEST CONDITIONS		MIN	TYP(1)	MAX	UNIT
V_{OD}	Differential output voltage magnitude	R_L = 100 Ω,	See Figure 2	247	340	454	mV
ΔV_{OD}	Change in differential output voltage magnitude between logic states	R_L = 100 Ω,	See Figure 2	–50		50	mV
$V_{OC(SS)}$	Steady-state common-mode output voltage	See Figure 3		1.125	1.2	1.375	V
$\Delta V_{OC(SS)}$	Change in steady-state common-mode output voltage between logic states	See Figure 3		–50		50	mV
$V_{OC(PP)}$	Peak-to-peak common-mode output voltage	See Figure 3			50	150	mV
I_{CC}	Supply current	V_I = 0.8 V or 2 V,	Enabled, No load		9	20	mA
		V_I = 0.8 or 2 V,	R_L = 100 Ω, Enabled		25	35	
		V_I = 0 or V_{CC},	Disabled		0.25	1	
I_{IH}	High-level input current	V_{IH} = 2			4	20	µA
I_{IL}	Low-level input current	V_{IL} = 0.8 V			0.1	10	µA
I_{OS}	Short-circuit output current	$V_{O(Y)}$ or $V_{O(Z)}$ = 0			–4	–24	mA
		V_{OD} = 0				±12	
I_{OZ}	High-impedance output current	V_O = 0 or 2.4 V				±1	µA
$I_{O(OFF)}$	Power-off output current	V_{CC} = 0,	V_O = 2.4 V			±4	µA
C_i	Input capacitance				3		pF

(1) All typical values are at T_A = 25°C and with V_{CC} = 3.3 V.

SN55LVDS31 SWITCHING CHARACTERISTICS

over recommended operating conditions (unless otherwise noted)

PARAMETER		TEST CONDITIONS	MIN	TYP(1)	MAX	UNIT
t_{PLH}	Propagation delay time, low-to-high-level output	R_L = 100 Ω, C_L = 10 pF, See Figure 2	0.5	1.4	4	ns
t_{PHL}	Propagation delay time, high-to-low-level output		1	1.7	4.5	ns
t_r	Differential output signal rise time (20% to 80%)		0.4	0.5	1	ns
t_f	Differential output signal fall time (80% to 20%)		0.4	0.5	1	ns
$t_{sk(p)}$	Pulse skew ($\|t_{PHL} – t_{PLH}\|$)			0.3	0.6	ns
$t_{sk(o)}$	Channel-to-channel output skew(2)			0.3	0.6	ns
t_{PZH}	Propagation delay time, high-impedance-to-high-level output	See Figure 4		5.4	15	ns
t_{PZL}	Propagation delay time, high-impedance-to-low-level output			2.5	15	ns
t_{PHZ}	Propagation delay time, high-level-to-high-impedance output			8.1	17	ns
t_{PLZ}	Propagation delay time, low-level-to-high-impedance output			7.3	15	ns

(1) All typical values are at T_A = 25°C and with V_{CC} = 3.3 V.
(2) $t_{sk(o)}$ is the maximum delay time difference between drivers on the same device.

SN65LVDSxxxx ELECTRICAL CHARACTERISTICS

over recommended operating conditions (unless otherwise noted)

PARAMETER			TEST CONDITIONS		SN65LVDS31 SN65LVDS3487 SN65LVDS9638			UNIT
					MIN	TYP(1)	MAX	
V_{OD}	Differential output voltage magnitude		R_L = 100 Ω,	See Figure 2	247	340	454	mV
ΔV_{OD}	Change in differential output voltage magnitude between logic states		R_L = 100 Ω,	See Figure 2	–50		50	mV
$V_{OC(SS)}$	Steady-state common-mode output voltage		See Figure 3		1.125	1.2	1.375	V
$\Delta V_{OC(SS)}$	Change in steady-state common-mode output voltage between logic states		See Figure 3		–50		50	mV
$V_{OC(PP)}$	Peak-to-peak common-mode output voltage		See Figure 3			50	150	mV
I_{CC}	Supply current	SN65LVDS31, SN65LVDS3487	V_I = 0.8 V or 2 V,	Enabled, No load		9	20	mA
			V_I = 0.8 or 2 V,	R_L = 100 Ω, Enabled		25	35	
			V_I = 0 or V_{CC},	Disabled		0.25	1	
		SN65LVDS9638	V_I = 0.8 V or 2 V	No load		4.7	8	mA
				R_L = 100 Ω		9	13	
I_{IH}	High-level input current		V_{IH} = 2			4	20	µA
I_{IL}	Low-level input current		V_{IL} = 0.8 V			0.1	10	µA
I_{OS}	Short-circuit output current		$V_{O(Y)}$ or $V_{O(Z)}$ = 0			–4	–24	mA
			V_{OD} = 0				±12	
I_{OZ}	High-impedance output current		V_O = 0 or 2.4 V				±1	µA
$I_{O(OFF)}$	Power-off output current		V_{CC} = 0,	V_O = 2.4 V			±1	µA
C_i	Input capacitance					3		pF

(1) All typical values are at T_A = 25°C and with V_{CC} = 3.3 V.

SN65LVDSxxxx SWITCHING CHARACTERISTICS

over recommended operating conditions (unless otherwise noted)

PARAMETER		TEST CONDITIONS	SN65LVDS31 SN65LVDS3487 SN65LVDS9638			UNIT
			MIN	TYP(1)	MAX	
t_{PLH}	Propagation delay time, low-to-high-level output	R_L = 100 Ω, C_L = 10 pF, See Figure 2	0.5	1.4	2	ns
t_{PHL}	Propagation delay time, high-to-low-level output		1	1.7	2.5	ns
t_r	Differential output signal rise time (20% to 80%)		0.4	0.5	0.6	ns
t_f	Differential output signal fall time (80% to 20%)		0.4	0.5	0.6	ns
$t_{sk(p)}$	Pulse skew ($\lvert t_{PHL} – t_{PLH} \rvert$)			0.3	0.6	ns
$t_{sk(o)}$	Channel-to-channel output skew(2)			0	0.3	ns
$t_{sk(pp)}$	Part-to-part skew(3)				800	ps
t_{PZH}	Propagation delay time, high-impedance-to-high-level output	See Figure 4		5.4	15	ns
t_{PZL}	Propagation delay time, high-impedance-to-low-level output			2.5	15	ns
t_{PHZ}	Propagation delay time, high-level-to-high-impedance output			8.1	15	ns
t_{PLZ}	Propagation delay time, low-level-to-high-impedance output			7.3	15	ns

(1) All typical values are at T_A = 25°C and with V_{CC} = 3.3 V.
(2) $t_{sk(o)}$ is the skew between specified outputs of a single device with all driving inputs connected together and the outputs switching in the same direction while driving identical specified loads.
(3) $t_{sk(pp)}$ is the magnitude of the difference in propagation delay times between any specified terminals of two devices when both devices operate with the same supply voltages, same temperature, and have identical packages and test circuits.

PARAMETER MEASUREMENT INFORMATION

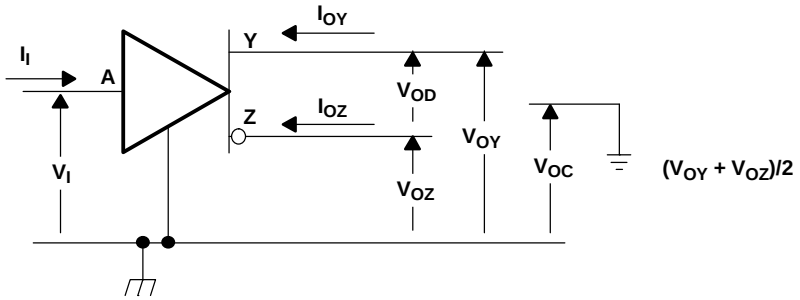

Figure 1. Voltage and Current Definitions

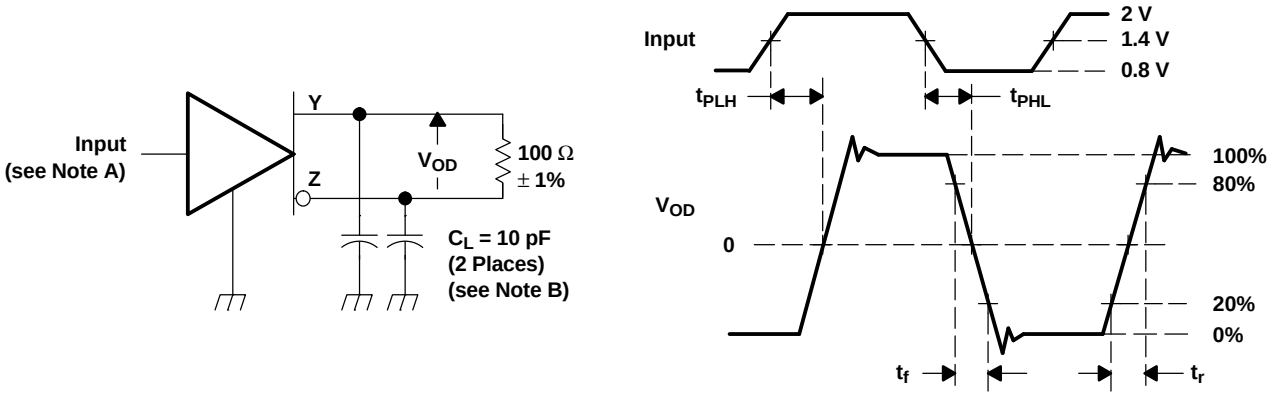

NOTES: A. All input pulses are supplied by a generator having the following characteristics: t_r or $t_f \leq 1$ ns, pulse repetition rate (PRR) = 50 Mpps, pulse width = 10 ± 0.2 ns.
B. C_L includes instrumentation and fixture capacitance within 6 mm of the D.U.T.

Figure 2. Test Circuit, Timing, and Voltage Definitions for the Differential Output Signal

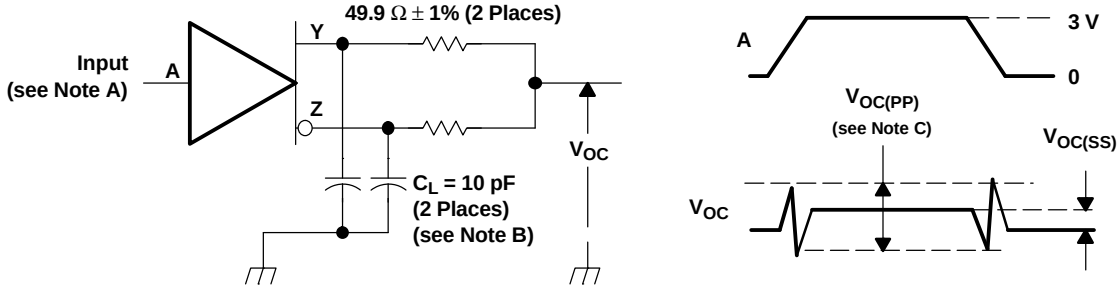

NOTES: A. All input pulses are supplied by a generator having the following characteristics: t_r or $t_f \leq 1$ ns, pulse repetition rate (PRR) = 50 Mpps, pulse width = 10 ± 0.2 ns.
B. C_L includes instrumentation and fixture capacitance within 6 mm of the D.U.T.
C. The measurement of $V_{OC(PP)}$ is made on test equipment with a –3-dB bandwidth of at least 300 MHz.

Figure 3. Test Circuit and Definitions for the Driver Common-Mode Output Voltage

PARAMETER MEASUREMENT INFORMATION (continued)

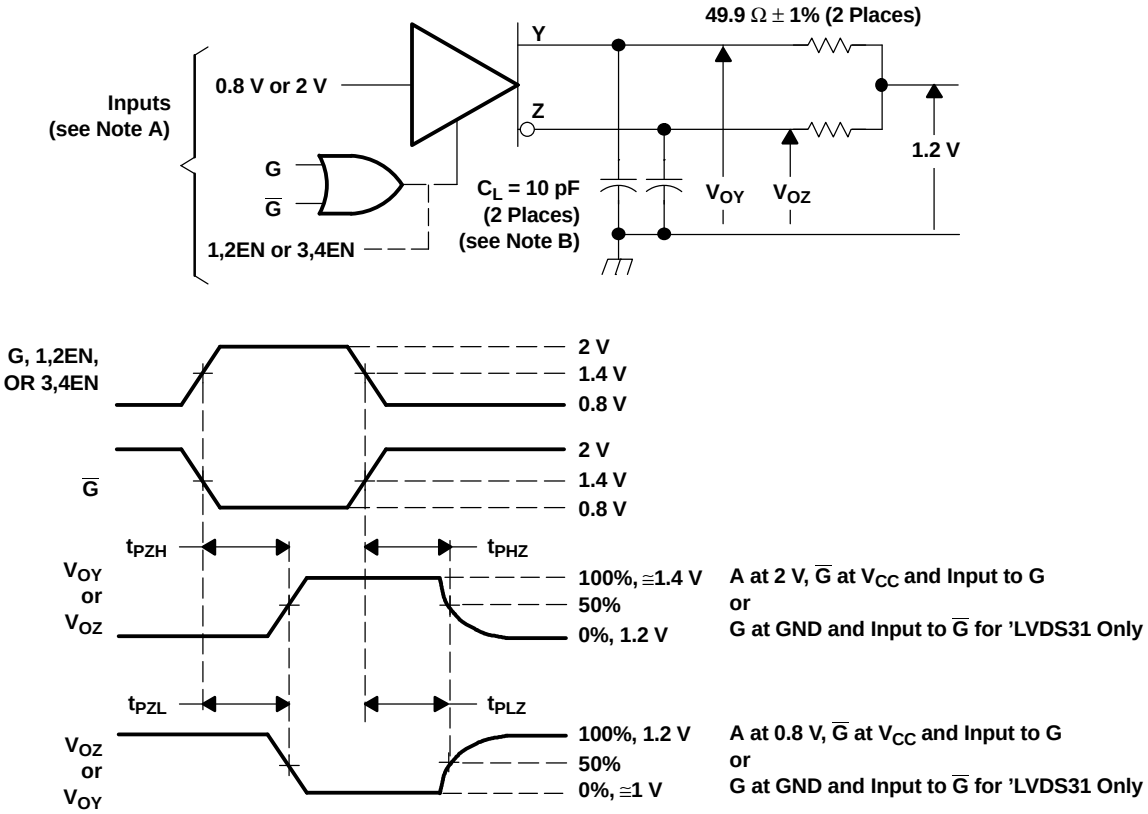

NOTES: A. All input pulses are supplied by a generator having the following characteristics: t_r or t_f < 1 ns, pulse repetition rate (PRR) = 0.5 Mpps, pulse width = 500 ± 10 ns.
B. C_L includes instrumentation and fixture capacitance within 6 mm of the D.U.T.

Figure 4. Enable-/Disable-Time Circuit and Definitions

TYPICAL CHARACTERISTICS

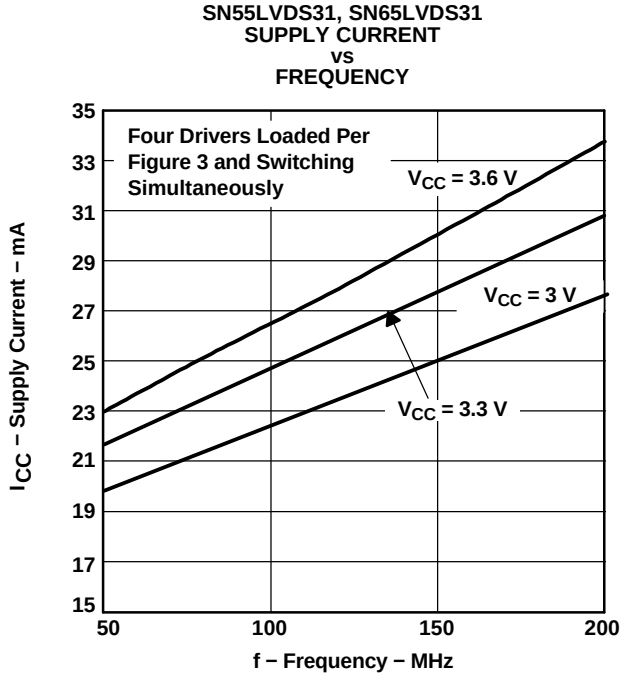

Figure 5.

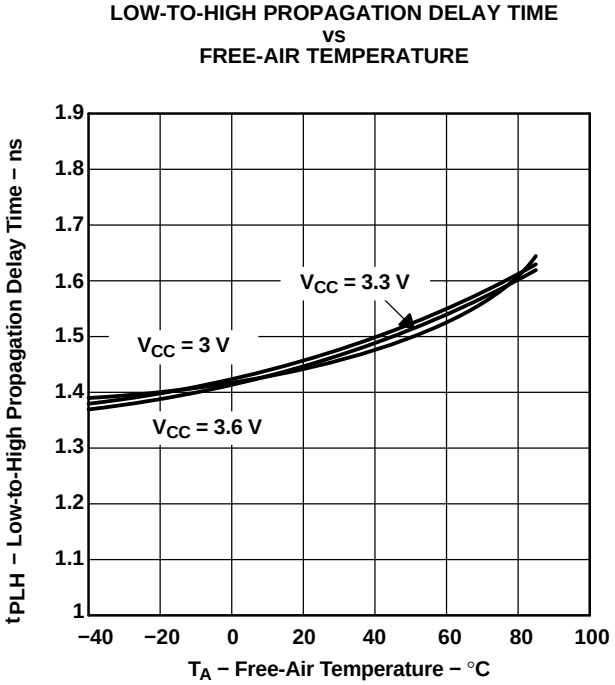

Figure 6.

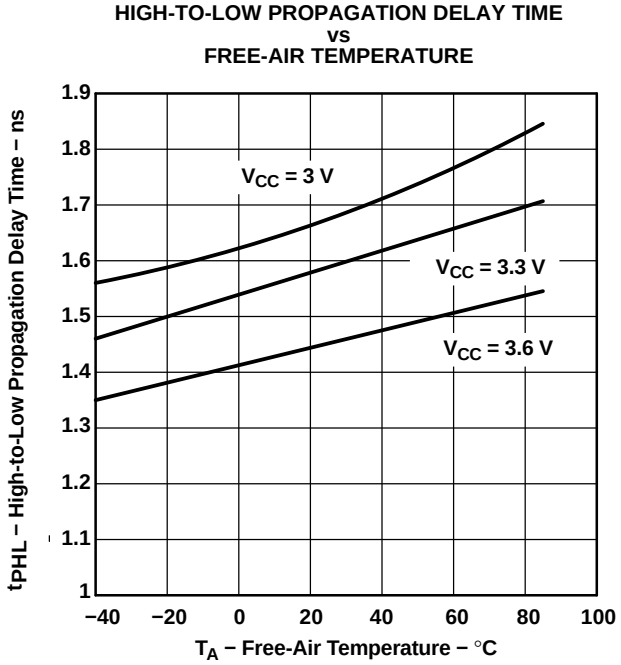

Figure 7.

APPLICATION INFORMATION

The devices are generally used as building blocks for high-speed point-to-point data transmission where ground differences are less than 1 V. Devices can interoperate with RS-422, PECL, and IEEE-P1596. Drivers/receivers approach ECL speeds without the power and dual supply requirements.

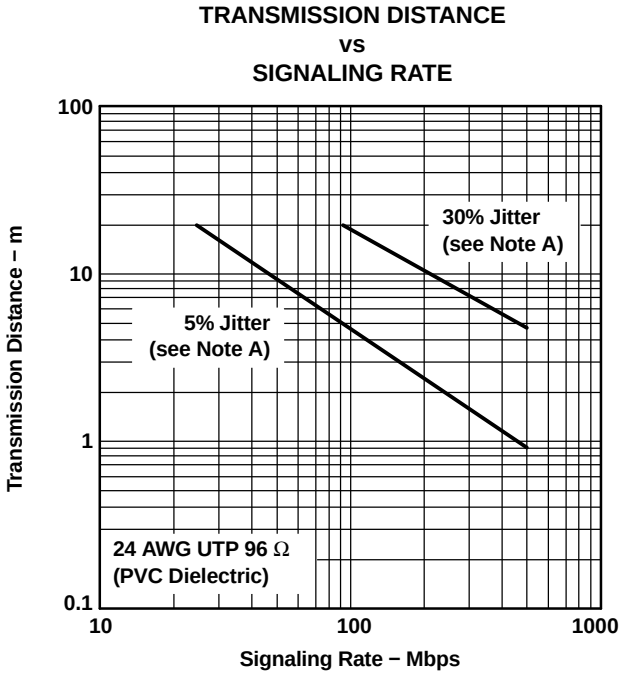

A. This parameter is the percentage of distortion of the unit interval (UI) with a pseudorandom data pattern.

Figure 8. Typical Transmission Distance Versus Signaling Rate

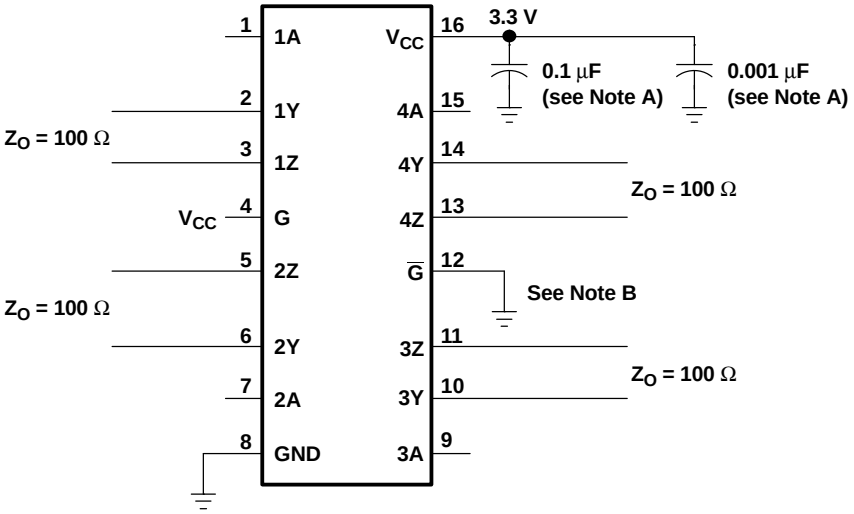

NOTES: A. Place a 0.1-µF and a 0.001-µF Z5U ceramic, mica, or polystyrene dielectric, 0805 size, chip capacitor between V_{CC} and the ground plane. The capacitors should be located as close as possible to the device terminals.
B. Unused enable inputs should be tied to V_{CC} or GND, as appropriate.

Figure 9. Typical Application Circuit Schematic

APPLICATION INFORMATION (continued)

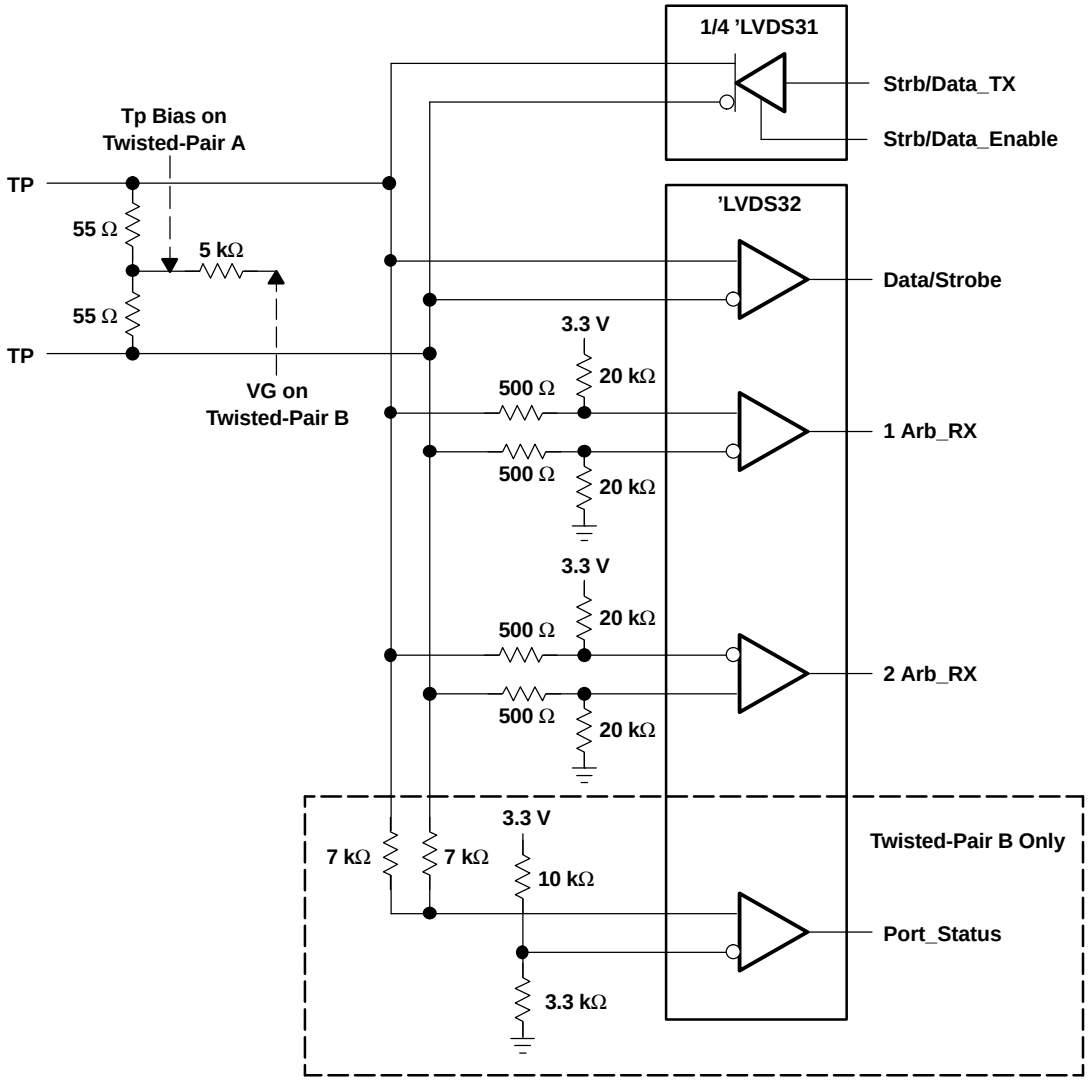

NOTES: A. Resistors are leadless, thick film (0603), 5% tolerance.
B. Decoupling capacitance is not shown, but recommended.
C. V_{CC} is 3 V to 3.6 V.
D. The differential output voltage of the 'LVDS31 can exceed that specified by IEEE1394.

Figure 10. 100-Mbps IEEE 1394 Transceiver

APPLICATION INFORMATION (continued)

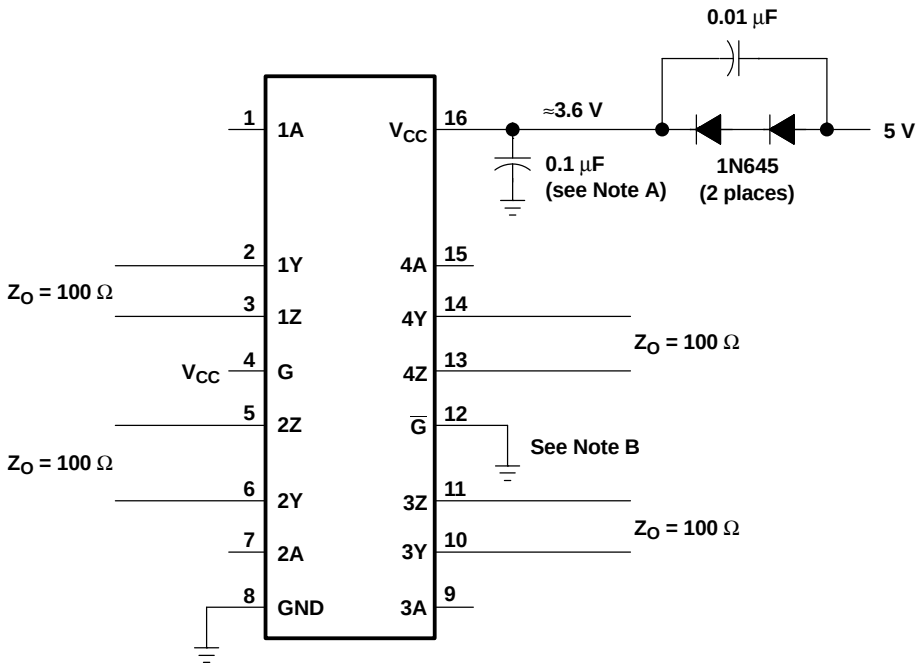

A. Place a 0.1-µF Z5U ceramic, mica, or polystyrene dielectric, 0805 size, chip capacitor between V_{CC} and the ground plane. The capacitor should be located as close as possible to the device terminals.

B. Unused enable inputs should be tied to V_{CC} or GND, as appropriate.

Figure 11. Operation With 5-V Supply

RELATED INFORMATION

IBIS modeling is available for this device. Contact the local TI sales office or the TI Web site at www.ti.com for more information.

For more application guidelines, see the following documents:

- *Low-Voltage Differential Signaling Design Notes* (SLLA014)
- *Interface Circuits for TIA/EIA-644* (LVDS) (SLLA038)
- *Reducing EMI With LVDS* (SLLA030)
- *Slew Rate Control of LVDS Circuits* (SLLA034)
- *Using an LVDS Receiver With RS-422 Data* (SLLA031)
- *Evaluating the LVDS EVM* (SLLA033)

PACKAGING INFORMATION

Orderable Device	Status (1)	Package Type	Package Drawing	Pins	Package Qty	Eco Plan (2)	Lead/Ball Finish	MSL Peak Temp (3)
5962-9762101Q2A	ACTIVE	LCCC	FK	20	1	TBD	POST-PLATE	N / A for Pkg Type
5962-9762101QEA	ACTIVE	CDIP	J	16	1	TBD	A42 SNPB	N / A for Pkg Type
5962-9762101QFA	ACTIVE	CFP	W	16	1	TBD	A42 SNPB	N / A for Pkg Type
5962-9762101VFA	ACTIVE	CFP	W	16	1	TBD	A42 SNPB	N / A for Pkg Type
SN55LVDS31W	ACTIVE	CFP	W	16	1	TBD	A42 SNPB	N / A for Pkg Type
SN65LVDS31D	ACTIVE	SOIC	D	16	40	Green (RoHS & no Sb/Br)	CU NIPDAU	Level-1-260C-UNLIM
SN65LVDS31DG4	ACTIVE	SOIC	D	16	40	Green (RoHS & no Sb/Br)	CU NIPDAU	Level-1-260C-UNLIM
SN65LVDS31DR	ACTIVE	SOIC	D	16	2500	Green (RoHS & no Sb/Br)	CU NIPDAU	Level-1-260C-UNLIM
SN65LVDS31DRG4	ACTIVE	SOIC	D	16	2500	Green (RoHS & no Sb/Br)	CU NIPDAU	Level-1-260C-UNLIM
SN65LVDS31NSR	ACTIVE	SO	NS	16	2000	Green (RoHS & no Sb/Br)	CU NIPDAU	Level-1-260C-UNLIM
SN65LVDS31NSRG4	ACTIVE	SO	NS	16	2000	Green (RoHS & no Sb/Br)	CU NIPDAU	Level-1-260C-UNLIM
SN65LVDS31PW	ACTIVE	TSSOP	PW	16	90	Green (RoHS & no Sb/Br)	CU NIPDAU	Level-1-260C-UNLIM
SN65LVDS31PWR	ACTIVE	TSSOP	PW	16	2000	Green (RoHS & no Sb/Br)	CU NIPDAU	Level-1-260C-UNLIM
SN65LVDS31PWRG4	ACTIVE	TSSOP	PW	16	2000	Green (RoHS & no Sb/Br)	CU NIPDAU	Level-1-260C-UNLIM
SN65LVDS3487D	ACTIVE	SOIC	D	16	40	Green (RoHS & no Sb/Br)	CU NIPDAU	Level-1-260C-UNLIM
SN65LVDS3487DG4	ACTIVE	SOIC	D	16	40	Green (RoHS & no Sb/Br)	CU NIPDAU	Level-1-260C-UNLIM
SN65LVDS3487DR	ACTIVE	SOIC	D	16	2500	Green (RoHS & no Sb/Br)	CU NIPDAU	Level-1-260C-UNLIM
SN65LVDS3487DRG4	ACTIVE	SOIC	D	16	2500	Green (RoHS & no Sb/Br)	CU NIPDAU	Level-1-260C-UNLIM
SN65LVDS9638D	ACTIVE	SOIC	D	8	75	Green (RoHS & no Sb/Br)	CU NIPDAU	Level-1-260C-UNLIM
SN65LVDS9638DG4	ACTIVE	SOIC	D	8	75	Green (RoHS & no Sb/Br)	CU NIPDAU	Level-1-260C-UNLIM
SN65LVDS9638DGK	ACTIVE	MSOP	DGK	8	80	Green (RoHS & no Sb/Br)	CU NIPDAU	Level-1-260C-UNLIM
SN65LVDS9638DGKG4	ACTIVE	MSOP	DGK	8	80	Green (RoHS & no Sb/Br)	CU NIPDAU	Level-1-260C-UNLIM
SN65LVDS9638DGKR	ACTIVE	MSOP	DGK	8	2500	Green (RoHS & no Sb/Br)	CU NIPDAU	Level-1-260C-UNLIM
SN65LVDS9638DGKRG4	ACTIVE	MSOP	DGK	8	2500	Green (RoHS & no Sb/Br)	CU NIPDAU	Level-1-260C-UNLIM
SN65LVDS9638DGN	ACTIVE	MSOP-Power PAD	DGN	8	80	Green (RoHS & no Sb/Br)	CU NIPDAU	Level-1-260C-UNLIM
SN65LVDS9638DGNR	ACTIVE	MSOP-Power PAD	DGN	8	2500	Green (RoHS & no Sb/Br)	CU NIPDAU	Level-1-260C-UNLIM

Orderable Device	Status [1]	Package Type	Package Drawing	Pins	Package Qty	Eco Plan [2]	Lead/Ball Finish	MSL Peak Temp [3]
SN65LVDS9638DGNRG4	ACTIVE	MSOP-Power PAD	DGN	8	2500	Green (RoHS & no Sb/Br)	CU NIPDAU	Level-1-260C-UNLIM
SN65LVDS9638DR	ACTIVE	SOIC	D	8	2500	Green (RoHS & no Sb/Br)	CU NIPDAU	Level-1-260C-UNLIM
SN65LVDS9638DRG4	ACTIVE	SOIC	D	8	2500	Green (RoHS & no Sb/Br)	CU NIPDAU	Level-1-260C-UNLIM
SNJ55LVDS31FK	ACTIVE	LCCC	FK	20	1	TBD	POST-PLATE	N / A for Pkg Type
SNJ55LVDS31J	ACTIVE	CDIP	J	16	1	TBD	A42 SNPB	N / A for Pkg Type
SNJ55LVDS31W	ACTIVE	CFP	W	16	1	TBD	A42 SNPB	N / A for Pkg Type
SNLVDS9638DGNG4	ACTIVE	MSOP-Power PAD	DGN	8	80	Green (RoHS & no Sb/Br)	CU NIPDAU	Level-1-260C-UNLIM

[1] The marketing status values are defined as follows:
ACTIVE: Product device recommended for new designs.
LIFEBUY: TI has announced that the device will be discontinued, and a lifetime-buy period is in effect.
NRND: Not recommended for new designs. Device is in production to support existing customers, but TI does not recommend using this part in a new design.
PREVIEW: Device has been announced but is not in production. Samples may or may not be available.
OBSOLETE: TI has discontinued the production of the device.

[2] Eco Plan - The planned eco-friendly classification: Pb-Free (RoHS), Pb-Free (RoHS Exempt), or Green (RoHS & no Sb/Br) - please check http://www.ti.com/productcontent for the latest availability information and additional product content details.
TBD: The Pb-Free/Green conversion plan has not been defined.
Pb-Free (RoHS): TI's terms "Lead-Free" or "Pb-Free" mean semiconductor products that are compatible with the current RoHS requirements for all 6 substances, including the requirement that lead not exceed 0.1% by weight in homogeneous materials. Where designed to be soldered at high temperatures, TI Pb-Free products are suitable for use in specified lead-free processes.
Pb-Free (RoHS Exempt): This component has a RoHS exemption for either 1) lead-based flip-chip solder bumps used between the die and package, or 2) lead-based die adhesive used between the die and leadframe. The component is otherwise considered Pb-Free (RoHS compatible) as defined above.
Green (RoHS & no Sb/Br): TI defines "Green" to mean Pb-Free (RoHS compatible), and free of Bromine (Br) and Antimony (Sb) based flame retardants (Br or Sb do not exceed 0.1% by weight in homogeneous material)

[3] MSL, Peak Temp. -- The Moisture Sensitivity Level rating according to the JEDEC industry standard classifications, and peak solder temperature.

Important Information and Disclaimer: The information provided on this page represents TI's knowledge and belief as of the date that it is provided. TI bases its knowledge and belief on information provided by third parties, and makes no representation or warranty as to the accuracy of such information. Efforts are underway to better integrate information from third parties. TI has taken and continues to take reasonable steps to provide representative and accurate information but may not have conducted destructive testing or chemical analysis on incoming materials and chemicals. TI and TI suppliers consider certain information to be proprietary, and thus CAS numbers and other limited information may not be available for release.

In no event shall TI's liability arising out of such information exceed the total purchase price of the TI part(s) at issue in this document sold by TI to Customer on an annual basis.

J (R–GDIP–T**) CERAMIC DUAL IN–LINE PACKAGE

14 LEADS SHOWN

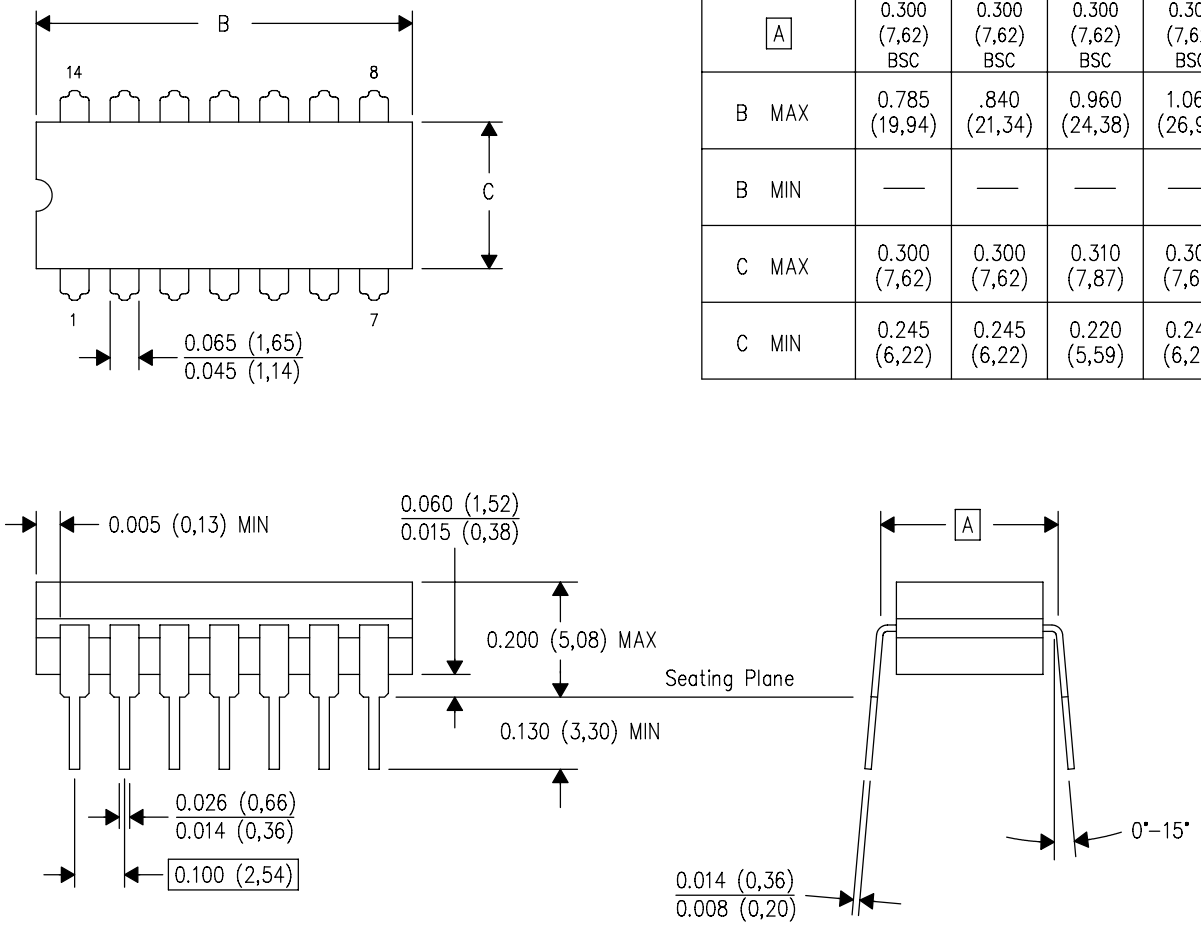

DIM \ PINS **	14	16	18	20
A	0.300 (7,62) BSC	0.300 (7,62) BSC	0.300 (7,62) BSC	0.300 (7,62) BSC
B MAX	0.785 (19,94)	.840 (21,34)	0.960 (24,38)	1.060 (26,92)
B MIN	—	—	—	—
C MAX	0.300 (7,62)	0.300 (7,62)	0.310 (7,87)	0.300 (7,62)
C MIN	0.245 (6,22)	0.245 (6,22)	0.220 (5,59)	0.245 (6,22)

4040083/F 03/03

NOTES:
- A. All linear dimensions are in inches (millimeters).
- B. This drawing is subject to change without notice.
- C. This package is hermetically sealed with a ceramic lid using glass frit.
- D. Index point is provided on cap for terminal identification only on press ceramic glass frit seal only.
- E. Falls within MIL STD 1835 GDIP1–T14, GDIP1–T16, GDIP1–T18 and GDIP1–T20.

W (R–GDFP–F16) CERAMIC DUAL FLATPACK

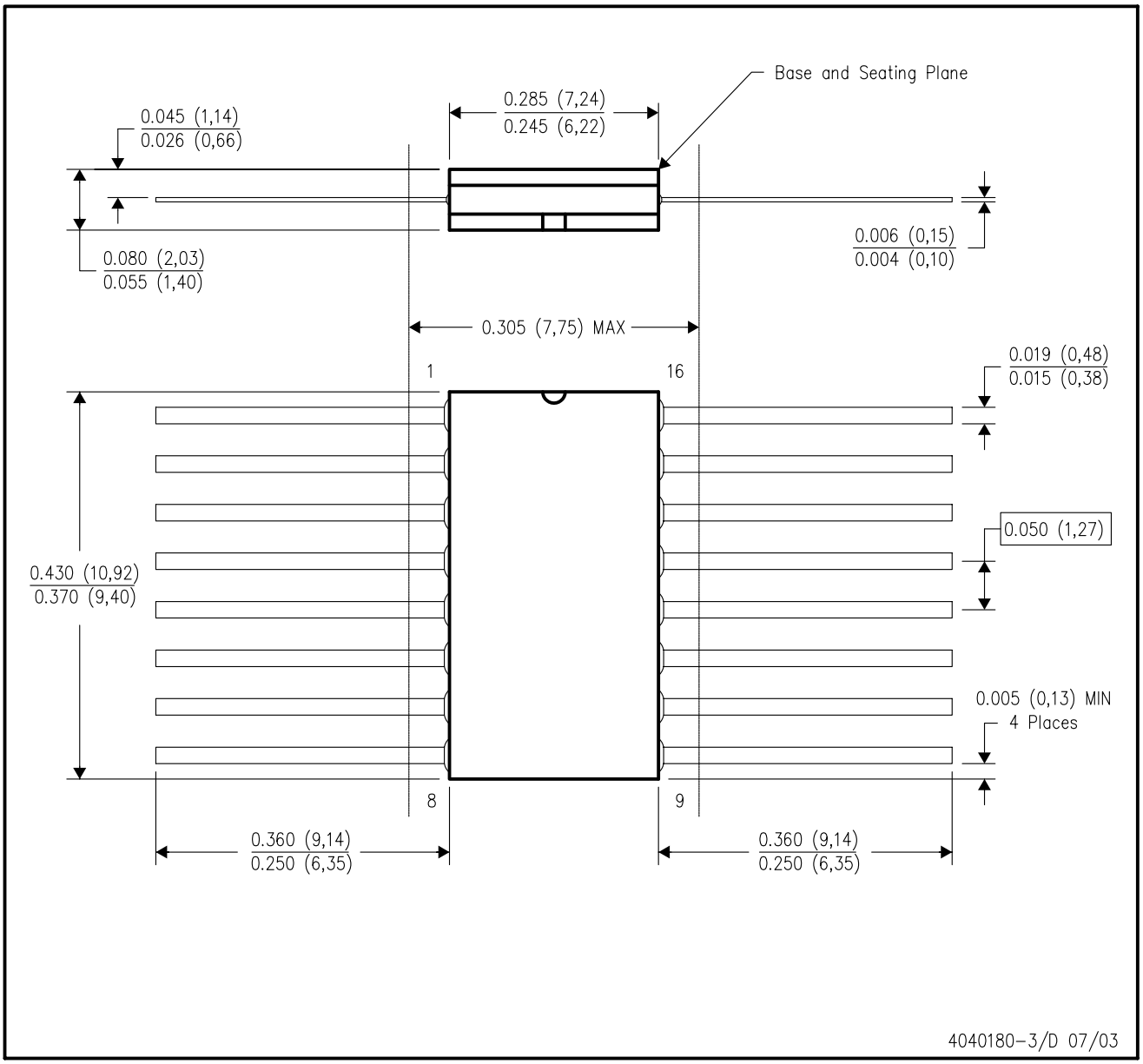

NOTES:
A. All linear dimensions are in inches (millimeters).
B. This drawing is subject to change without notice.
C. This package can be hermetically sealed with a ceramic lid using glass frit.
D. Index point is provided on cap for terminal identification only.
E. Falls within MIL STD 1835 GDFP1–F16 and JEDEC MO–092AC

FK (S-CQCC-N**)

LEADLESS CERAMIC CHIP CARRIER

28 TERMINAL SHOWN

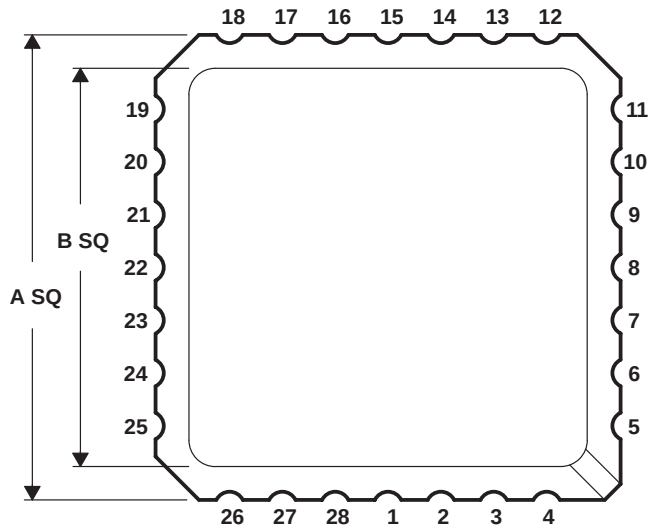

NO. OF TERMINALS **	A		B	
	MIN	MAX	MIN	MAX
20	0.342 (8,69)	0.358 (9,09)	0.307 (7,80)	0.358 (9,09)
28	0.442 (11,23)	0.458 (11,63)	0.406 (10,31)	0.458 (11,63)
44	0.640 (16,26)	0.660 (16,76)	0.495 (12,58)	0.560 (14,22)
52	0.739 (18,78)	0.761 (19,32)	0.495 (12,58)	0.560 (14,22)
68	0.938 (23,83)	0.962 (24,43)	0.850 (21,6)	0.858 (21,8)
84	1.141 (28,99)	1.165 (29,59)	1.047 (26,6)	1.063 (27,0)

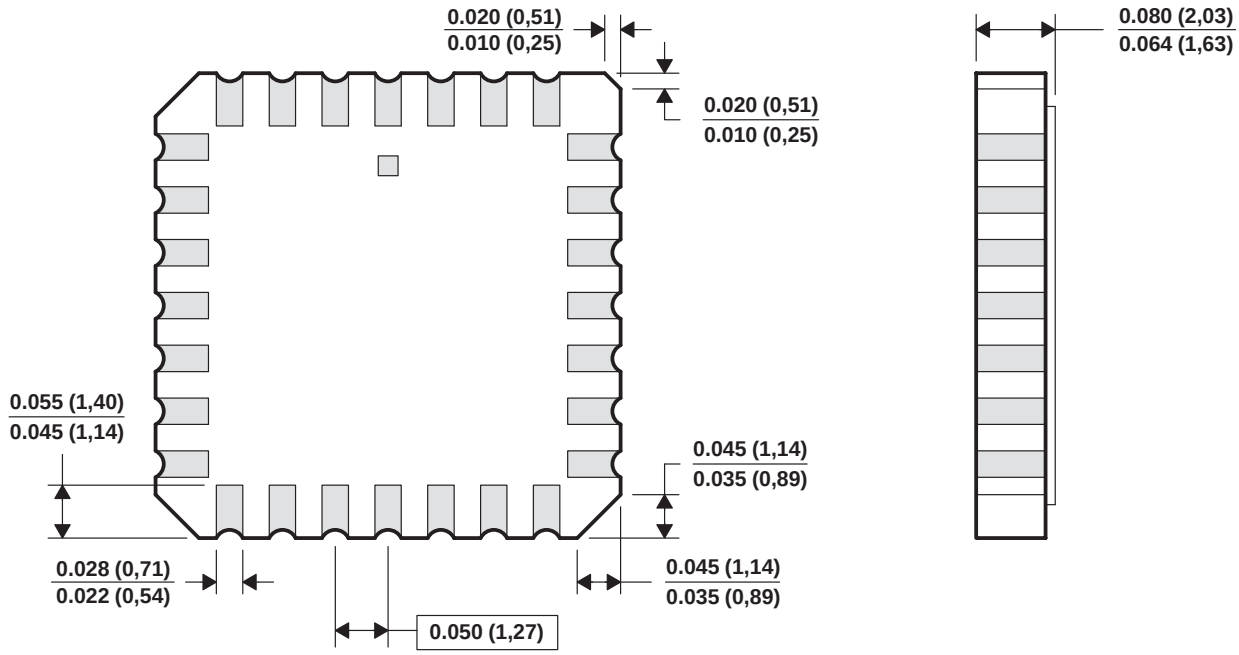

4040140/D 10/96

NOTES:
A. All linear dimensions are in inches (millimeters).
B. This drawing is subject to change without notice.
C. This package can be hermetically sealed with a metal lid.
D. The terminals are gold plated.
E. Falls within JEDEC MS-004

DGK (S–PDSO–G8) PLASTIC SMALL–OUTLINE PACKAGE

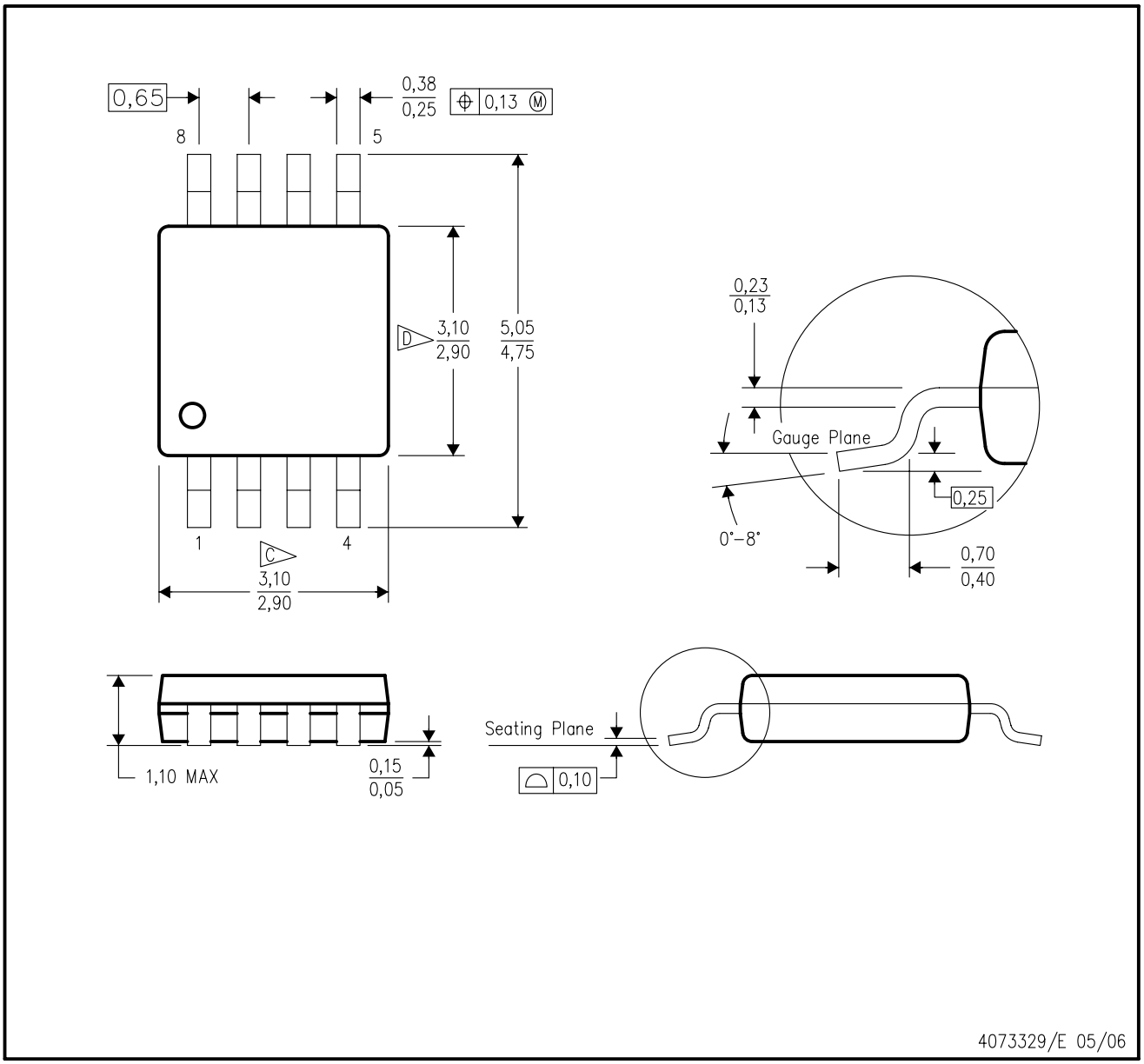

NOTES:
A. All linear dimensions are in millimeters.
B. This drawing is subject to change without notice.
C. Body length does not include mold flash, protrusions, or gate burrs. Mold flash, protrusions, or gate burrs shall not exceed 0.15 per end.
D. Body width does not include interlead flash. Interlead flash shall not exceed 0.50 per side.
E. Falls within JEDEC MO–187 variation AA, except interlead flash.

DGN (S–PDSO–G8) PowerPAD™ PLASTIC SMALL–OUTLINE PACKAGE

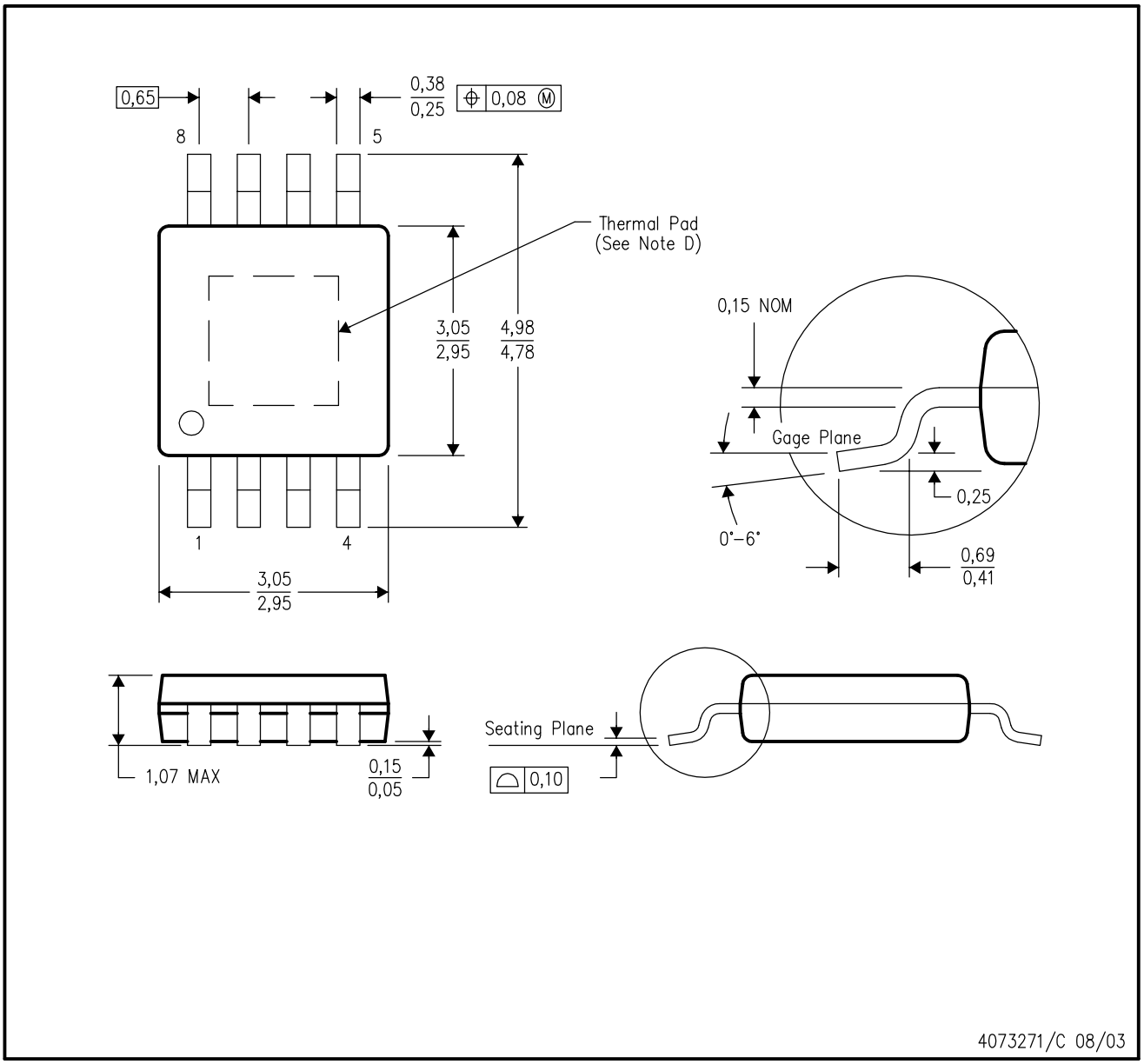

NOTES:
A. All linear dimensions are in millimeters.
B. This drawing is subject to change without notice.
C. Body dimensions do not include mold flash or protrusion.
D. This package is designed to be soldered to a thermal pad on the board. Refer to Technical Brief, PowerPad Thermally Enhanced Package, Texas Instruments Literature No. SLMA002 for information regarding recommended board layout. This document is available at www.ti.com <http://www.ti.com>.
E. Falls within JEDEC MO–187

PowerPAD is a trademark of Texas Instruments.

THERMAL INFORMATION

This PowerPAD™ package incorporates an exposed thermal pad that is designed to be attached directly to an external heatsink. When the thermal pad is soldered directly to the printed circuit board (PCB), the PCB can be used as a heatsink. In addition, through the use of thermal vias, the thermal pad can be attached directly to a ground or power plane (whichever is applicable), or alternatively, a special heatsink structure designed into the PCB. This design optimizes the heat transfer from the integrated circuit (IC).

For additional information on the PowerPAD package and how to take advantage of its heat dissipating abilities, refer to Technical Brief, PowerPAD Thermally Enhanced Package, Texas Instruments Literature No. SLMA002 and Application Brief, PowerPAD Made Easy, Texas Instruments Literature No. SLMA004. Both documents are available at www.ti.com.

The exposed thermal pad dimensions for this package are shown in the following illustration.

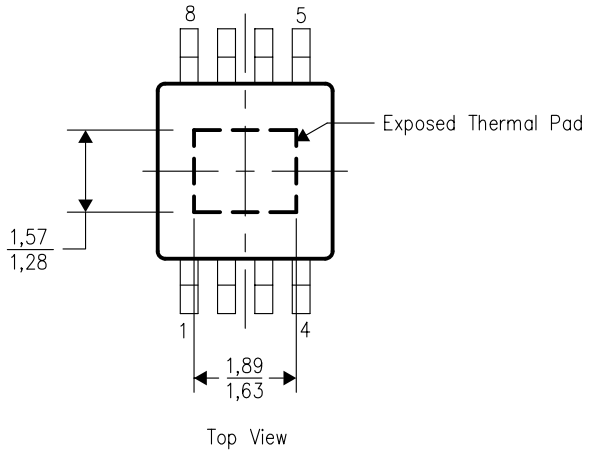

NOTE: All linear dimensions are in millimeters

Exposed Thermal Pad Dimensions

DGN (R–PDSO–G8) PowerPAD™

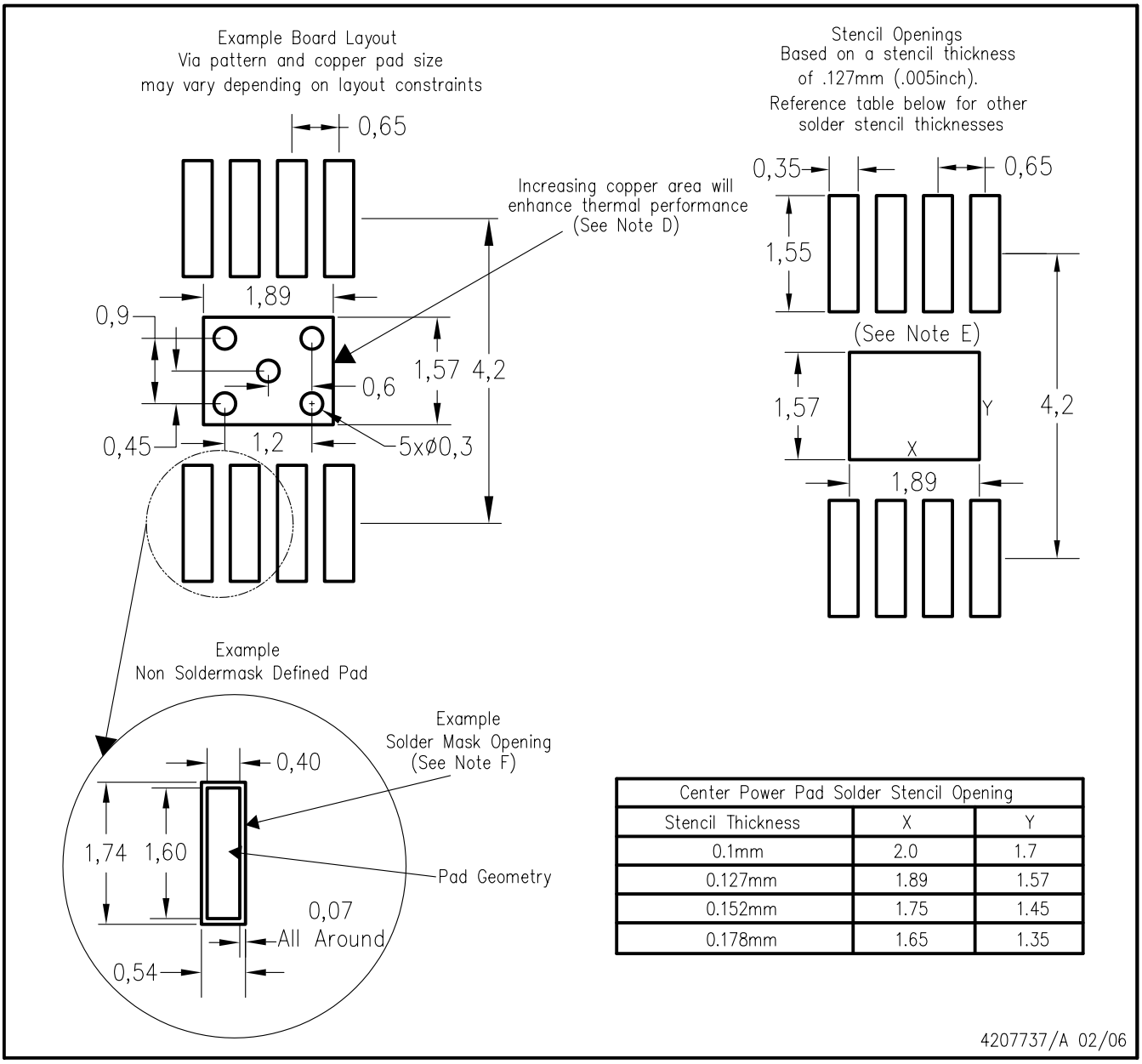

Center Power Pad Solder Stencil Opening		
Stencil Thickness	X	Y
0.1mm	2.0	1.7
0.127mm	1.89	1.57
0.152mm	1.75	1.45
0.178mm	1.65	1.35

NOTES:
A. All linear dimensions are in millimeters.
B. This drawing is subject to change without notice.
C. Customers should place a note on the circuit board fabrication drawing not to alter the center solder mask defined pad.
D. This package is designed to be soldered to a thermal pad on the board. Refer to Technical Brief, PowerPad Thermally Enhanced Package, Texas Instruments Literature No. SLMA002, SLMA004, and also the Product Data Sheets for specific thermal information, via requirements, and recommended board layout. These documents are available at www.ti.com <http://www.ti.com>. Publication IPC–7351 is recommended for alternate designs.
E. Laser cutting apertures with trapezoidal walls and also rounding corners will offer better paste release. Customers should contact their board assembly site for stencil design recommendations. Example stencil design based on a 50% volumetric metal load solder paste. Refer to IPC–7525 for other stencil recommendations.
F. Customers should contact their board fabrication site for solder mask tolerances between and around signal pads.

D (R–PDSO–G16) PLASTIC SMALL–OUTLINE PACKAGE

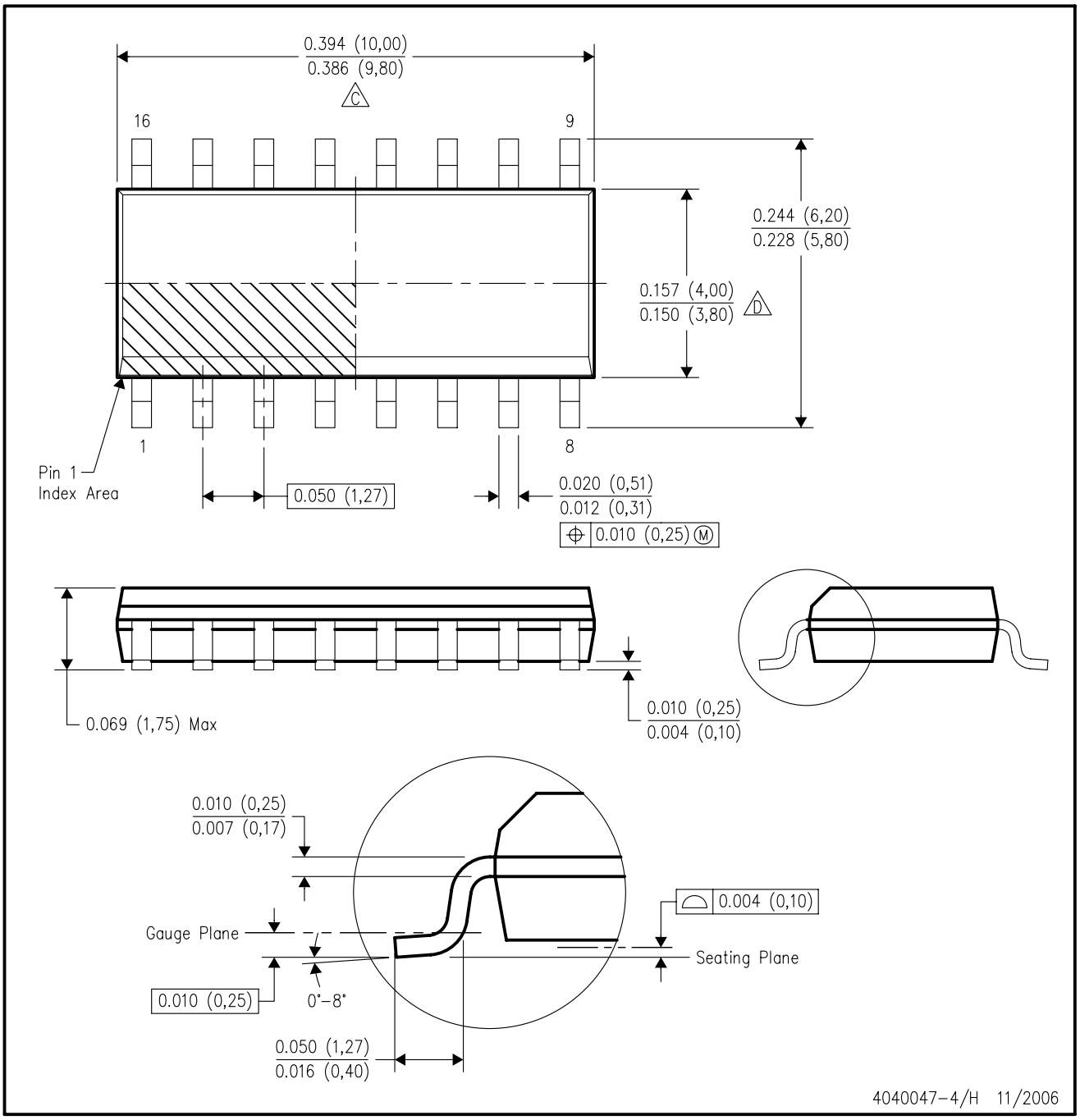

NOTES:
- A. All linear dimensions are in inches (millimeters).
- B. This drawing is subject to change without notice.
- C. Body length does not include mold flash, protrusions, or gate burrs. Mold flash, protrusions, or gate burrs shall not exceed .006 (0,15) per end.
- D. Body width does not include interlead flash. Interlead flash shall not exceed .017 (0,43) per side.
- E. Reference JEDEC MS–012 variation AC.

D (R–PDSO–G8) PLASTIC SMALL–OUTLINE PACKAGE

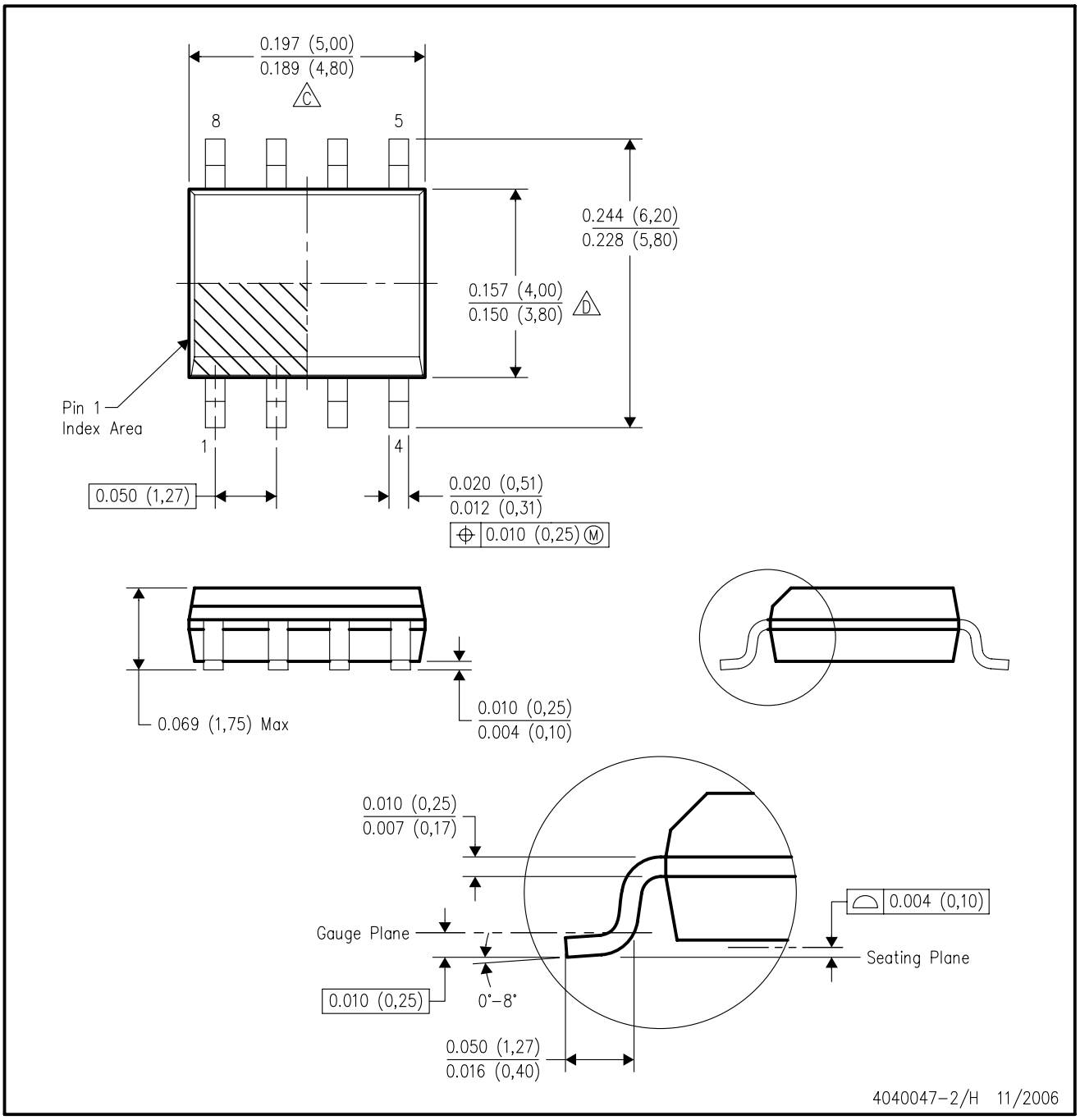

NOTES:
- A. All linear dimensions are in inches (millimeters).
- B. This drawing is subject to change without notice.
- C. Body length does not include mold flash, protrusions, or gate burrs. Mold flash, protrusions, or gate burrs shall not exceed .006 (0,15) per end.
- D. Body width does not include interlead flash. Interlead flash shall not exceed .017 (0,43) per side.
- E. Reference JEDEC MS–012 variation AA.

MECHANICAL DATA

NS (R-PDSO-G)** **PLASTIC SMALL-OUTLINE PACKAGE**

14-PINS SHOWN

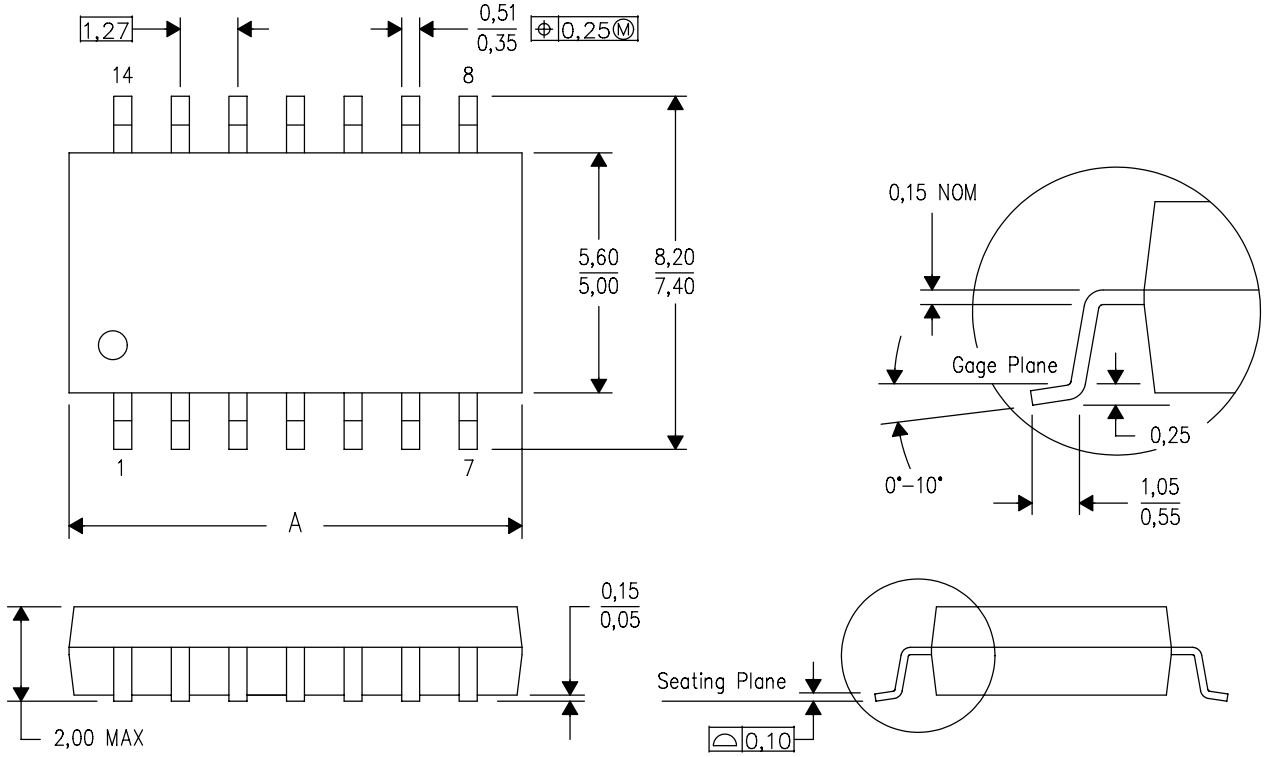

DIM \ PINS **	14	16	20	24
A MAX	10,50	10,50	12,90	15,30
A MIN	9,90	9,90	12,30	14,70

4040062/C 03/03

NOTES:
A. All linear dimensions are in millimeters.
B. This drawing is subject to change without notice.
C. Body dimensions do not include mold flash or protrusion, not to exceed 0,15.

PW (R-PDSO-G)** **PLASTIC SMALL-OUTLINE PACKAGE**

14 PINS SHOWN

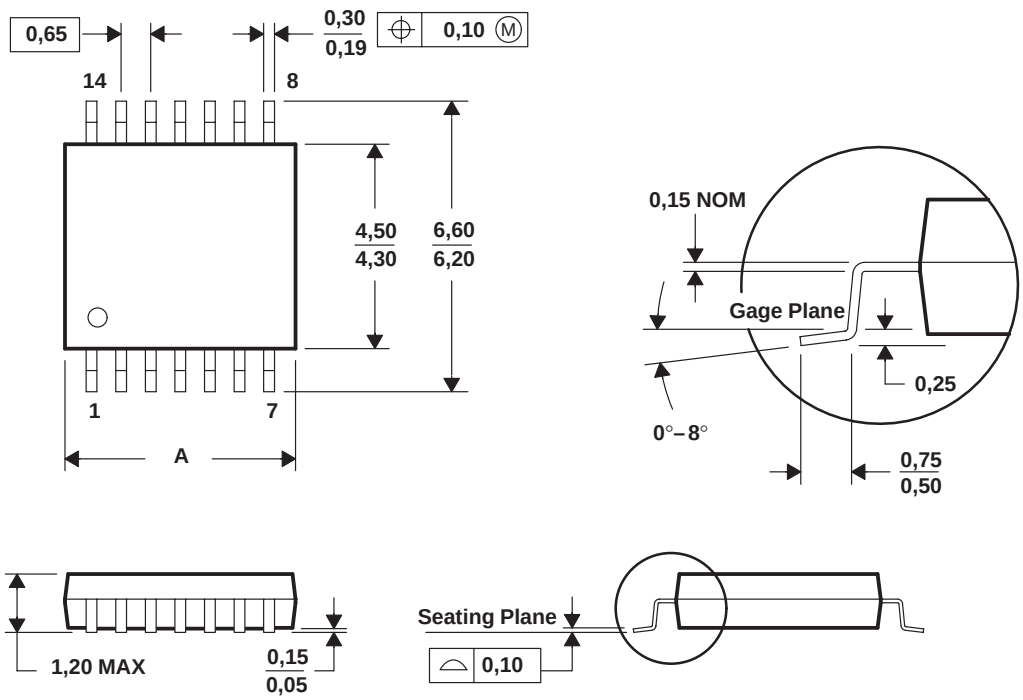

DIM \ PINS **	8	14	16	20	24	28
A MAX	3,10	5,10	5,10	6,60	7,90	9,80
A MIN	2,90	4,90	4,90	6,40	7,70	9,60

4040064/F 01/97

NOTES: A. All linear dimensions are in millimeters.
B. This drawing is subject to change without notice.
C. Body dimensions do not include mold flash or protrusion not to exceed 0,15.
D. Falls within JEDEC MO-153

IMPORTANT NOTICE

Texas Instruments Incorporated and its subsidiaries (TI) reserve the right to make corrections, modifications, enhancements, improvements, and other changes to its products and services at any time and to discontinue any product or service without notice. Customers should obtain the latest relevant information before placing orders and should verify that such information is current and complete. All products are sold subject to TI's terms and conditions of sale supplied at the time of order acknowledgment.

TI warrants performance of its hardware products to the specifications applicable at the time of sale in accordance with TI's standard warranty. Testing and other quality control techniques are used to the extent TI deems necessary to support this warranty. Except where mandated by government requirements, testing of all parameters of each product is not necessarily performed.

TI assumes no liability for applications assistance or customer product design. Customers are responsible for their products and applications using TI components. To minimize the risks associated with customer products and applications, customers should provide adequate design and operating safeguards.

TI does not warrant or represent that any license, either express or implied, is granted under any TI patent right, copyright, mask work right, or other TI intellectual property right relating to any combination, machine, or process in which TI products or services are used. Information published by TI regarding third-party products or services does not constitute a license from TI to use such products or services or a warranty or endorsement thereof. Use of such information may require a license from a third party under the patents or other intellectual property of the third party, or a license from TI under the patents or other intellectual property of TI.

Reproduction of information in TI data books or data sheets is permissible only if reproduction is without alteration and is accompanied by all associated warranties, conditions, limitations, and notices. Reproduction of this information with alteration is an unfair and deceptive business practice. TI is not responsible or liable for such altered documentation.

Resale of TI products or services with statements different from or beyond the parameters stated by TI for that product or service voids all express and any implied warranties for the associated TI product or service and is an unfair and deceptive business practice. TI is not responsible or liable for any such statements.

Following are URLs where you can obtain information on other Texas Instruments products and application solutions:

Products		**Applications**	
Amplifiers	amplifier.ti.com	Audio	www.ti.com/audio
Data Converters	dataconverter.ti.com	Automotive	www.ti.com/automotive
DSP	dsp.ti.com	Broadband	www.ti.com/broadband
Interface	interface.ti.com	Digital Control	www.ti.com/digitalcontrol
Logic	logic.ti.com	Military	www.ti.com/military
Power Mgmt	power.ti.com	Optical Networking	www.ti.com/opticalnetwork
Microcontrollers	microcontroller.ti.com	Security	www.ti.com/security
Low Power Wireless	www.ti.com/lpw	Telephony	www.ti.com/telephony
		Video & Imaging	www.ti.com/video
		Wireless	www.ti.com/wireless

Mailing Address: Texas Instruments
Post Office Box 655303 Dallas, Texas 75265

Copyright © 2006, Texas Instruments Incorporated