# POWERTIP TECH. CORP.

DISPLAY DEVICES FOR BETTER ELECTRONIC DESIGN

## Specification For Approval

## 【產品規格書】

Customer : RYSTON

Model Type : LCD Module

Sample Code : _____

Mass Production Code : PC2004ERF-BWB-B

Edition : 0

| Customer Sign | Sales Sign | Approved By | Prepared By |
|---|---|---|---|
| | | 曾平輝 11/13-01 | 熊小英 11/13-01 |

NO.PT-R-106-3

# CONTENTS


## 1.SPECIFICATIONS

1.1 Features
1.2 Mechanical Specifications
1.3 Absolute Maximum Ratings
1.4 DC Electrical Characteristics
1.5 Optical Characteristics
1.6 Backlight Characteristics

## 2.MODULE STRUCTURE

2.1 Counter Drawing
2.2 Interface Pin Description
2.3 Timing Characteristics
2.4 Display Command
2.5 Character Pattern

# 1. SPECIFICATIONS

## 1.1 Features

- 20-characters, four-lines liquid crystal display of 5*7 dot matrix + cursor
- 1/16 Duty, 1/4 bias
- FSTN LCD, positive, White
- Transflective LCD
- 6 o'clock viewing angle
- 4 bits or 8 bits parallel data input
- Built-in EL backlight

## 1.2 Mechanical Specifications

- Outline dimension : 118.0mm(L)*43.0mm(W)*10.1mm max.(H)
- Viewing area : 76.0mm *25.2mm
- Active area : 70.4mm *20.8mm
- Dot size : 0.55mm *0.55mm
- Dot pitch : 0.6mm *0.6mm
- Character Size : 2.95mm *4.75mm

## 1.3 Absolute Maximum Ratings

| Item | Symbol | Conditions | Min. | Max. | Unit |
|---|---|---|---|---|---|
| Power supply Voltage | VDD | - | -0.3 | +0.7 | V |
| LCD drive Supply voltage | VDD-VO | - | VDD-10.0 | VDD+0.3 | V |
| Input voltage | VIN | - | -0.3 | VDD+0.3 | V |
| Operating temperature | TOPR | - | 0 | 50 | °C |
| Storage temperature | TSTG | - | -20 | 70 | °C |
| Humidity*1 | HD | - | - | 90 | %RH |

## 1.4 DC Electrical Characteristics

VDD=+5V±10%,VSS=0V,TA=25°C

| Item | Symbol | Condition | Min. | Typ. | Max. | Unit |
|---|---|---|---|---|---|---|
| Logic Supply voltage | VDD | - | 4.5 | - | 5.5 | V |
| "H" input voltage | VIH | - | 0.7VDD | - | VDD | V |
| "L" input voltage | VIL | - | -0.3 | - | 0.6 | V |
| "H" output voltage | VOH | - | 3.9 | - | VDD | V |
| "L" output voltage | VOL | - | - | - | 0.4 | V |
| Supply current | IDD | VDD=5V | - | 1.5 | - | mA |
| LCD driving voltage | VOP | VDD-VO | - | 4.9 | - | V |

## 1.5 Optical Characteristics

1/16 duty, 1/4 bias, Vop=4.9V, Ta=25°C

| Item | Symbol | Conditions | Min. | Typ. | Max | Reference |
|---|---|---|---|---|---|---|
| Viewing angle | θ | C≥2.0,∅=0° | 30° | - | - | Notes 1 & 2 |
| Contrast | C | θ=5°, ∅=0° | - | 4 | - | Note 3 |
| Response time(rise) | tr | θ=5°, ∅=0° | - | 120 ms | 180 ms | Note 4 |
| Response time(fall) | tf | θ=5°, ∅=0° | - | 130 ms | 200 ms | Note 4 |

| Parameter | Symbol | Temperature (°C) | Standard | | | Unit |
|---|---|---|---|---|---|---|
| | | | Min | Typ | Max | |
| Driving voltage VDD-VLCD | VOP | 0 | 4.5 | 4.8 | 5.1 | V |
| | | 25 | 4.3 | 4.8 | 5.0 | |
| | | 50 | 3.8 | 4.1 | 4.4 | |

## Note 1: Definition of angles θ and ∅

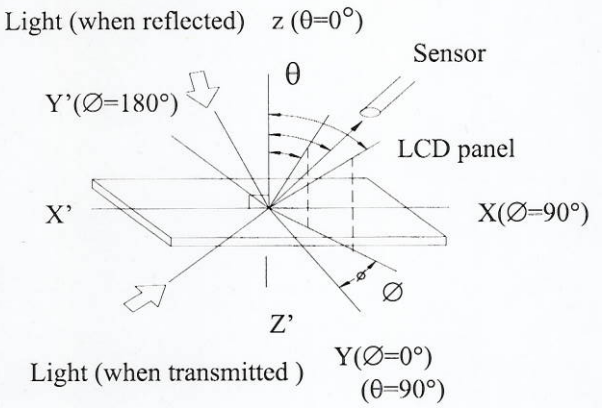


## Note 2: Definition of viewing angles θ1 and θ2

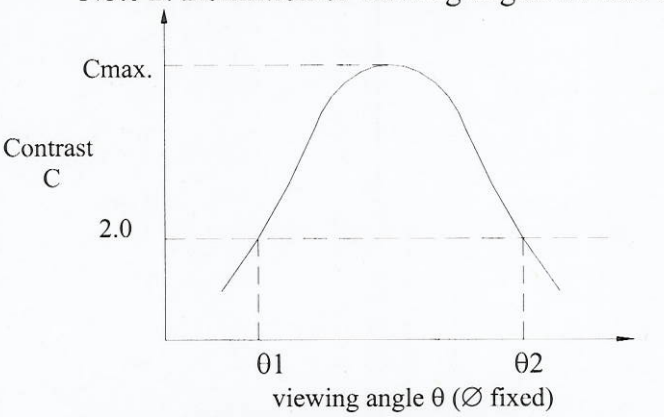


Note : Optimum viewing angle with the naked eye and viewing angle θ at Cmax. Above are not always the same

## Note 3: Definition of contrast C

$$C = \frac{\text{Brightness (reflection) of unselected dot (B2)}}{\text{Brightness (reflection) of selected dot (B1)}}$$

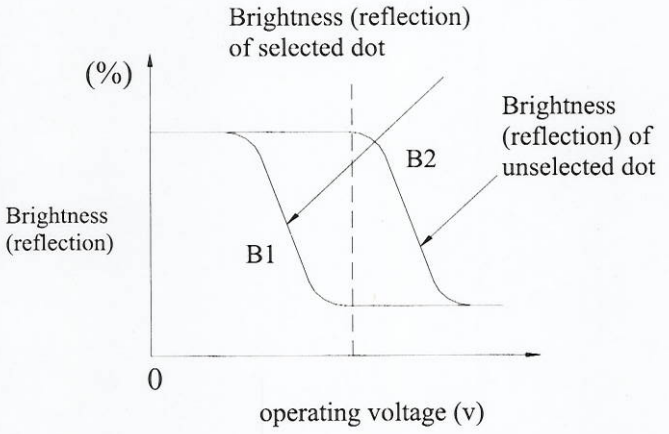


## Note 4: Definition of response time

Note: Measured with a transmissive LCD panel which is displayed 1 cm²

$V_{OPR}$ : Operating voltage
$t_r$ : Response time (rise)
$f_{FRM}$ : Frame frequency
$t_f$ : Response time (fall)

## 1.6 Backlight Characteristic

The LCD Module is backlight using a EL panel

•.Maximum ratings

| Item | Symbol | Maximum | Unit |
|---|---|---|---|
| Supply voltage | Vmax | 170 | Vrms |
| Supply frequency | Fmax | 1000 | Hz |
| Operating temperature | Topr | -35~+50 | ℃ |
| Operating humidity | Hopr | 90 | %RH. |
| Storage temperature | Tstg | -40~+60 | ℃ |
| Storage humidity | Hstg | 70 | %RH. |

•.Using specification

| Item | Specification | Unit |
|---|---|---|
| Operating voltage | 110 | Vrms |
| Frequency | 400 | Hz |

•.Electrical Characteristics

| Item | | Condition | Unit | Min. | Typ | Max. |
|---|---|---|---|---|---|---|
| Initiate intensity | | (sinewave) | $cd/m^2$ | 48 | 60 | - |
| CIE color coordinate | X | VAC 110 | | 0.2997 | | |
| | Y | Vrms | | 0.3876 | | |
| Current density | | Freq 400 | $mA/cm^2$ | 0.138 | | |
| Power density | | Hz | $mW/cm^2$ | 2.98 | | |
| Color | | | White | | | |

# 2. MODULE STRUCTURE

## 2.1 Counter Drawing

*See Appendix

## 2.2 Interface Pin Description

| Pin No. | Symbol | Signal Description |
|---|---|---|
| 1 | VSS | Signal ground (GND) |
| 2 | VDD | Power Supply (5 V) |
| 3 | VO | Operating voltage (LCD Driver) |
| 4 | RS | Register Selection input<br>High = Data register<br>Low = Instruction register (for write)<br>Busy flag address counter (for read) |
| 5 | R/W | Read/Write signal input is used to select the read/write mode<br>High = Read mode, Low = Write mode |
| 6 | E | Start enable signal to read or write the data |
| 7~10 | DB0 ~ DB3 | Four low order bi-directional three-state data bus lines. Use for data transfer between the MPU and the LCD module. These four are not used during 4-bit operation. |
| 11~14 | DB4 ~ DB7 | Four high order bi-directional three-state data bus lines. Used for data transfer between the MPU and the LCD module. DB7 can be used as a busy flag. |
| | A | Power supply LED backlight (+) |
| | K | Power supply LED backlight (-) |

Contrast Adjust

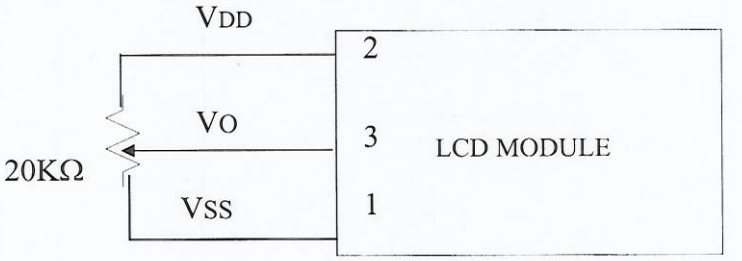

## 2.3 Timing Characteristics

- Writing data from MPU to ST7066U

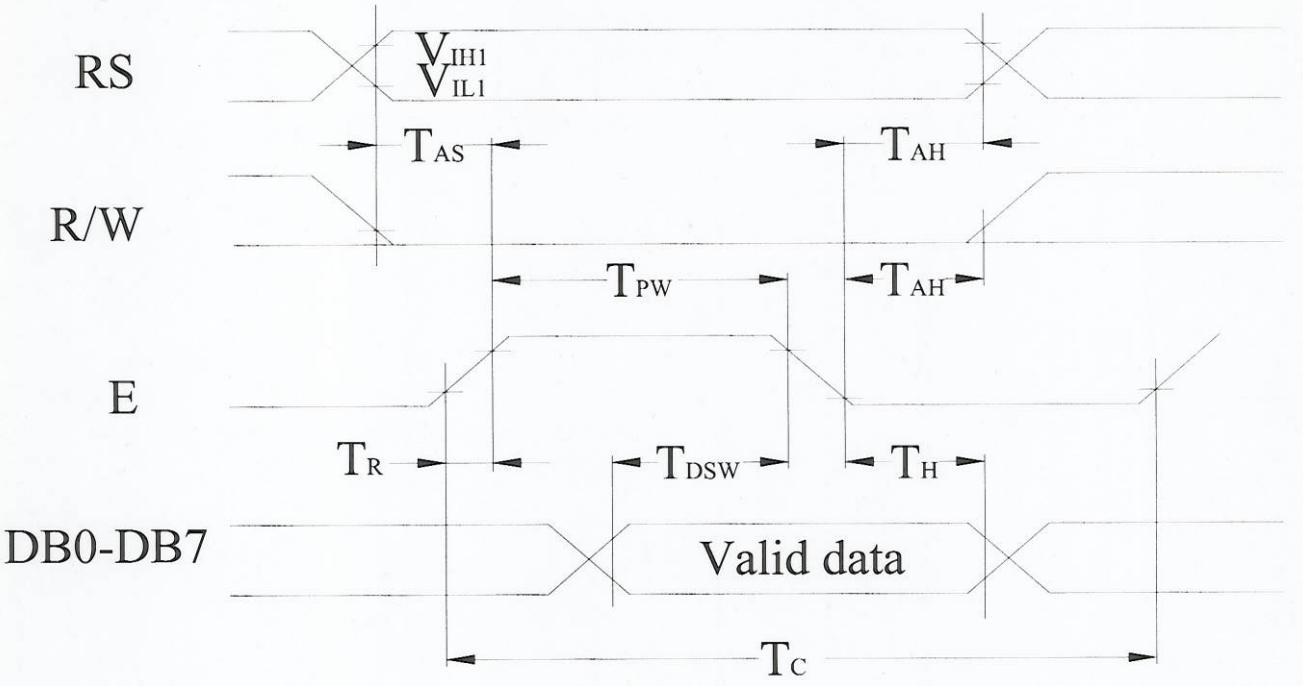


- Reading data from ST7066U to MPU

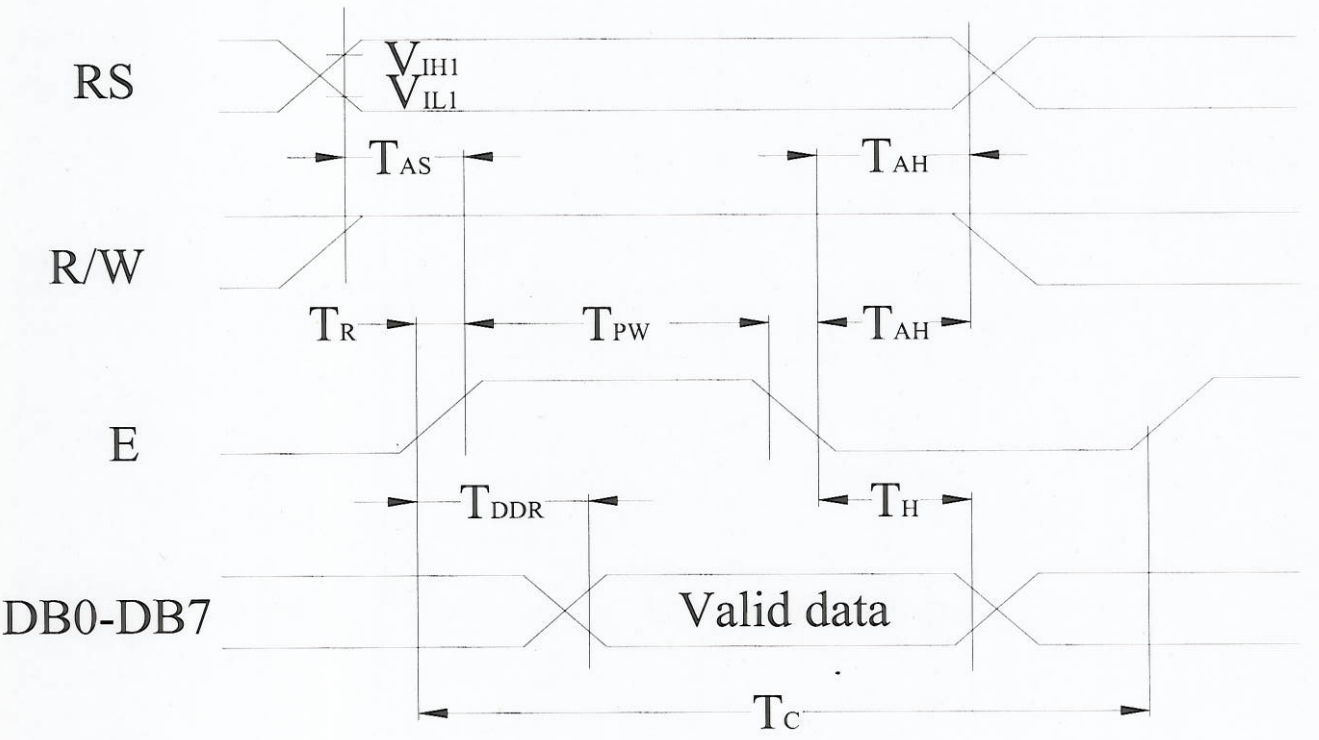

- Write Mode (Writing data from MPU to ST7066U)

(Vcc = +5V,Ta=25°C)

| Symbol | Characteristics | Test Condition | Min. | Typ. | Max. | Unit |
|---|---|---|---|---|---|---|
| $T_C$ | Enable Cycle Time | Pin E | 1200 | - | - | ns |
| $T_{PW}$ | Enable Pulse Width | Pin E | 140 | - | - | ns |
| $T_R$, $T_F$ | Enable Rise / Fall Time | Pin E | - | - | 25 | ns |
| $T_{AS}$ | Address Setup Time | Pins: RS , RW,E | 0 | - | - | ns |
| $T_{AH}$ | Address Hold Time | Pins :RS,RW,E | 10 | - | - | ns |
| $T_{DSW}$ | Data Setup Time | Pins:DB0~DB7 | 40 | - | - | ns |
| $T_H$ | Data Hold Time | Pins:DB0~DB7 | 10 | - | - | ns |

- Read Mode (Reading data from ST7066U to MPU)

(Vcc = +5V,Ta=25°C)

| Symbol | Characteristics | Test Condition | Min. | Typ. | Max. | Unit |
|---|---|---|---|---|---|---|
| $T_C$ | Enable Cycle Time | Pin E | 1200 | - | - | ns |
| $T_{PW}$ | Enable Pulse Width | Pin E | 140 | - | - | ns |
| $T_R$, $T_F$ | Enable Rise / Fall Time | Pin E | - | - | 25 | ns |
| $T_{AS}$ | Address Setup Time | Pins: RS , RW,E | 0 | - | - | ns |
| $T_{AH}$ | Address Hold Time | Pins :RS,RW,E | 10 | - | - | ns |
| $T_{DDR}$ | Data Setup Time | Pins:DB0~DB7 | - | - | 100 | ns |
| $T_H$ | Data Hold Time | Pins:DB0~DB7 | 10 | - | - | ns |

## 2.4 Display Command

| Instructions | Instruction Code | | | | | | | | | | Description | Execution Time (fosc = 270KHZ) |
|---|---|---|---|---|---|---|---|---|---|---|---|---|
| | RS | R/W | DB7 | DB6 | DB5 | DB4 | DB3 | DB2 | DB1 | DB0 | | |
| Clear Display | 0 | 0 | 0 | 0 | 0 | 0 | 0 | 0 | 0 | 1 | Write "20H" to DDRAM. and set DDRAM address to "00H" from AC. | 1.52ms |
| Return Home | 0 | 0 | 0 | 0 | 0 | 0 | 0 | 0 | 1 | × | Set DDRAM address to "00H" from AC and return cursor to it's original position if shifted. The contents of DDRAM are not changed. | 1.52ms |
| Entry Mode Set | 0 | 0 | 0 | 0 | 0 | 0 | 0 | 1 | I/D | SH | Assign cursor moving direction and make shift of entire display enable. | 37μs |
| Display ON/OFF Control | 0 | 0 | 0 | 0 | 0 | 0 | 1 | D | C | B | Sets display (D), cursor(C), and blinking of cursor(B) on/off control bit. | 37μs |
| Cursor or Display Shift | 0 | 0 | 0 | 0 | 0 | 1 | S/C | R/L | × | × | Set cursor moving and display shift control bit, and the direction, without changing of DDRAM data. | 37μs |
| Function Set | 0 | 0 | 0 | 0 | 1 | DL | N | F | × | × | Set interface data length (DL:4 - bit/8-bit), numbers of display line (N: 1-line/2-line), display font type(F:5*8 dots/5*11 dots) | 37μs |
| Set CGRAM Address | 0 | 0 | 0 | 1 | AC5 | AC4 | AC3 | AC2 | AC1 | AC0 | Set CGRAM address in address counter. | 37μs |
| Set DDRAM Address | 0 | 0 | 1 | AC6 | AC5 | AC4 | AC3 | AC2 | AC1 | AC0 | Set DDRAM address in address counter. | 37μs |
| Read Busy Flag and Address | 0 | 1 | BF | AC6 | AC5 | AC4 | AC3 | AC2 | AC1 | AC0 | Whether during internal operation or not can be known by reading BF. The contents of address counter can also be read. | 0μs |
| Write Data to RAM | 1 | 0 | D7 | D6 | D5 | D4 | D3 | D2 | D1 | D0 | Write data into internal RAM (DDRAM/CGRAM). | 37μs |
| Read Data from RAM | 1 | 1 | D7 | D6 | D5 | D4 | D3 | D2 | D1 | D0 | Read data from internal RAM (DDRAM/CGRAM). | 37μs |

※ "x":don't care

## 2.5 Character Pattern

Table 4(Cont.) (ROM Code: 0B)

NO.7066-0B

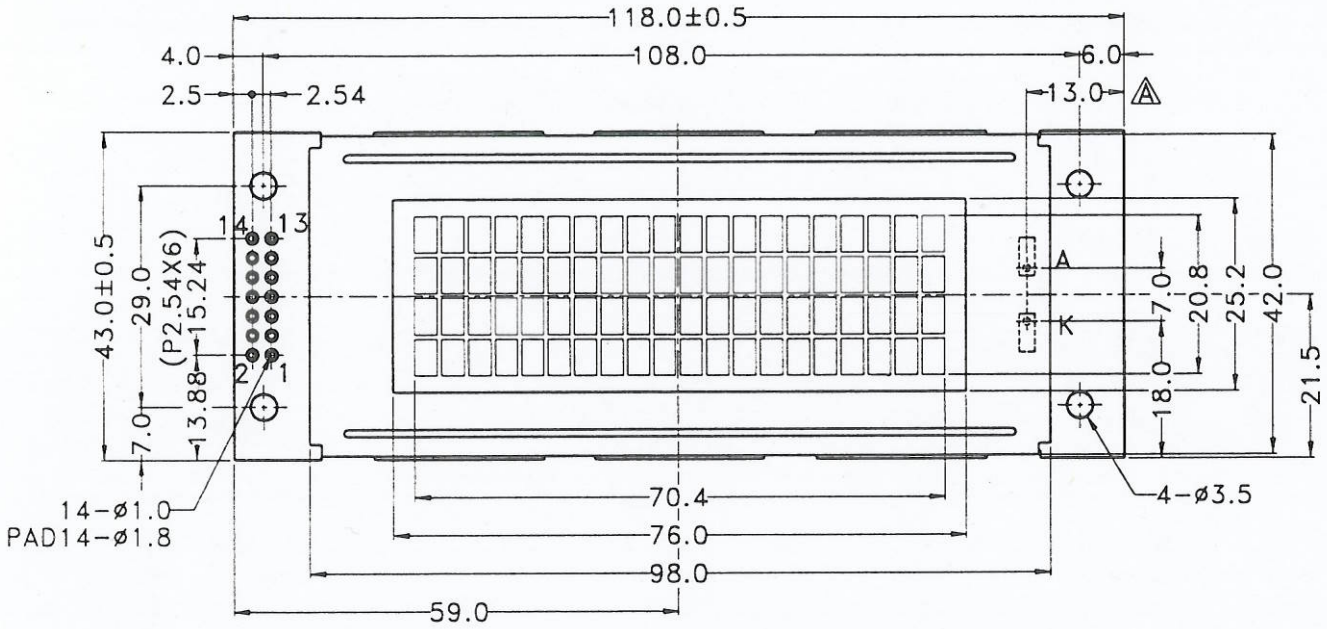


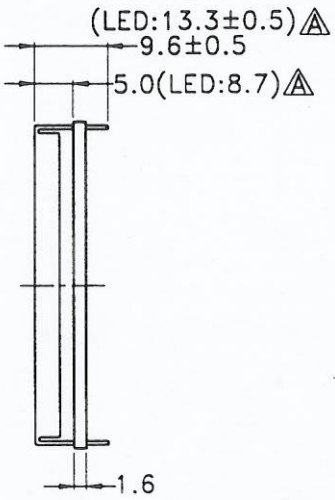


| PIN NO. | SIGNAL |
|---|---|
| 1 | Vss |
| 2 | Vdd |
| 3 | Vo |
| 4 | RS |
| 5 | R/$\overline{W}$ |
| 6 | E |
| 7 | DB0 |
| 8 | DB1 |
| 9 | DB2 |
| 10 | DB3 |
| 11 | DB4 |
| 12 | DB5 |
| 13 | DB6 |
| 14 | DB7 |

圖面發行
87. 4. 28
開發部

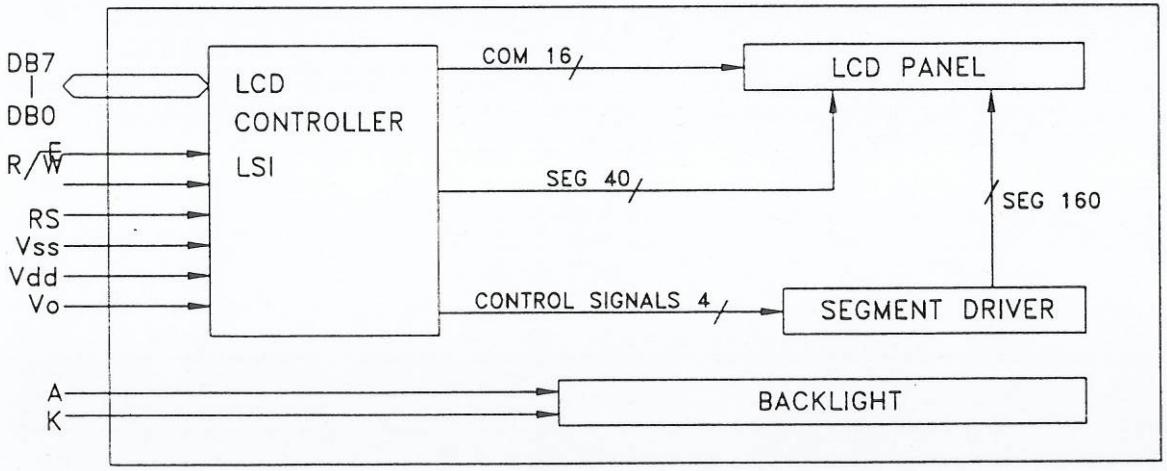


The tolerance unless classified ±0.3mm

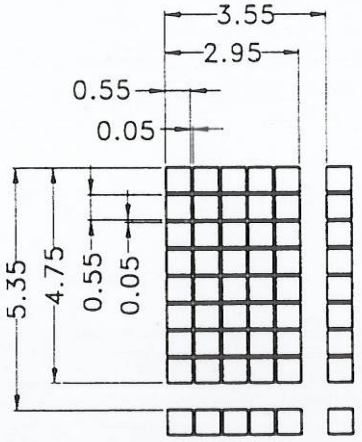


SCALE:4/1

| POWERTIP TECHNOLOGY | | |
|---|---|---|
| SCALE: 1/1 | | MODEL NAME PC 2004-B |
| UNIT: mm | | TITLE COUNTER DRAWING |
| EDI: A | PAGE: 1/1 | DRAWN NO. PC-95022 |
| APPROVED | CHECKER | DRAWN |

工程
87. 2. 26
程愛卿