SN74AUC1G74
SINGLE POSITIVE-EDGE-TRIGGERED D-TYPE FLIP-FLOP WITH CLEAR AND PRESET

SCES537A – DECEMBER 2003 – REVISED AUGUST 2005

FEATURES

- **Available in the Texas Instruments NanoStar™ and NanoFree™ Packages**
- **Optimized for 1.8-V Operation and Is 3.6-V I/O Tolerant to Support Mixed-Mode Signal Operation**
- **I_{off} Supports Partial-Power-Down Mode Operation**
- **Sub-1-V Operable**
- **Max t_{pd} of 1.5 ns at 1.8 V**
- **Low Power Consumption, 10-μA Max I_{CC}**
- **±8-mA Output Drive at 1.8 V**
- **Latch-Up Performance Exceeds 100 mA Per JESD 78, Class II**
- **ESD Protection Exceeds JESD 22**
  - **– 2000-V Human-Body Model (A114-A)**
  - **– 200-V Machine Model (A115-A)**
  - **– 1000-V Charged-Device Model (C101)**

DCT PACKAGE (TOP VIEW)

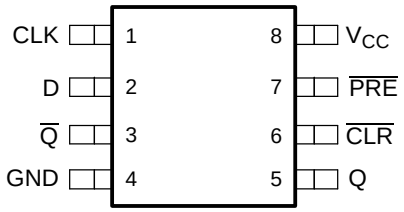

DCU PACKAGE (TOP VIEW)

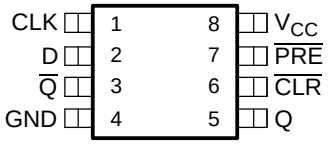

YEP OR YZP PACKAGE (BOTTOM VIEW)

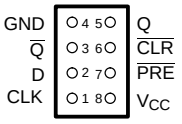

See mechanical drawings for dimensions.

DESCRIPTION/ORDERING INFORMATION

This single positive-edge-triggered D-type flip-flop is operational at 0.8-V to 2.7-V V_{CC}, but is designed specifically for 1.65-V to 1.95-V V_{CC} operation.

A low level at the preset ($\overline{PRE}$) or clear ($\overline{CLR}$) input sets or resets the outputs, regardless of the levels of the other inputs. When $\overline{PRE}$ and $\overline{CLR}$ are inactive (high), data at the data (D) input meeting the setup time requirements is transferred to the outputs on the positive-going edge of the clock pulse. Clock triggering occurs at a voltage level and is not related directly to the rise time of the clock pulse. Following the hold-time interval, data at the D input can be changed without affecting the levels at the outputs. To better optimize the flip-flop for higher frequencies, the $\overline{CLR}$ input overrides the $\overline{PRE}$ input when they are both low.

NanoStar™ and NanoFree™ package technology is a major breakthrough in IC packaging concepts, using the die as the package.

ORDERING INFORMATION

T_A	PACKAGE(1)		ORDERABLE PART NUMBER	TOP-SIDE MARKING(2)
–40°C to 85°C	NanoStar™ – WCSP (DSBGA) 0.23-mm Large Bump – YEP	Tape and reel	SN74AUC1G74YEPR	_ _ _UP_
	NanoFree™ – WCSP (DSBGA) 0.23-mm Large Bump – YZP (Pb-free)	Tape and reel	SN74AUC1G74YZPR	
	SSOP – DCT	Tape and reel	SN74AUC1G74DCTR	U74_ _ _
	VSSOP – DCU	Tape and reel	SN74AUC1G74DCUR	UP_

(1) Package drawings, standard packing quantities, thermal data, symbolization, and PCB design guidelines are available at www.ti.com/sc/package.
(2) DCT: The actual top-side marking has three additional characters that designate the year, month, and assembly/test site.
DCU: The actual top-side marking has one additional character that designates the assembly/test site.
YEP/YZP: The actual top-side marking has three preceding characters to denote year, month, and sequence code, and one following character to designate the assembly/test site. Pin 1 identifier indicates solder-bump composition (1 = SnPb, • = Pb-free).

Please be aware that an important notice concerning availability, standard warranty, and use in critical applications of Texas Instruments semiconductor products and disclaimers thereto appears at the end of this data sheet.

NanoStar, NanoFree are trademarks of Texas Instruments.

PRODUCTION DATA information is current as of publication date. Products conform to specifications per the terms of the Texas Instruments standard warranty. Production processing does not necessarily include testing of all parameters.

Copyright © 2003–2005, Texas Instruments Incorporated

DESCRIPTION/ORDERING INFORMATION (CONTINUED)

This device is fully specified for partial-power-down applications using I_{off}. The I_{off} circuitry disables the outputs, preventing damaging current backflow through the device when it is powered down.

FUNCTION TABLE

INPUTS				OUTPUTS	
$\overline{PRE}$	$\overline{CLR}$	CLK	D	Q	$\overline{Q}$
L	H	X	X	H	L
X	L	X	X	L	H
H	H	↑	H	H	L
H	H	↑	L	L	H
H	H	L	X	Q_0	$\overline{Q}_0$

LOGIC DIAGRAM (POSITIVE LOGIC)

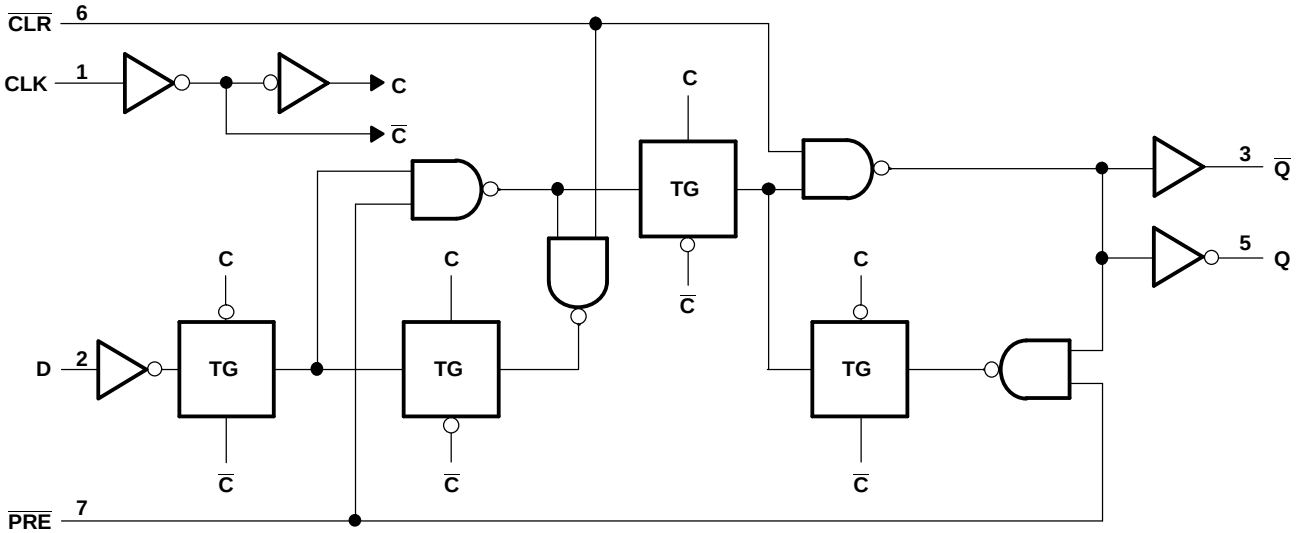

Absolute Maximum Ratings[(1)]

over operating free-air temperature range (unless otherwise noted)

			MIN	MAX	UNIT
V_{CC}	Supply voltage range		–0.5	3.6	V
V_I	Input voltage range[(2)]		–0.5	3.6	V
V_O	Voltage range applied to any output in the high-impedance or power-off state[(2)]		–0.5	3.6	V
V_O	Output voltage range[(2)]		–0.5	V_{CC} + 0.5	V
I_{IK}	Input clamp current	$V_I < 0$		–50	mA
I_{OK}	Output clamp current	$V_O < 0$		–50	mA
I_O	Continuous output current			±20	mA
	Continuous current through V_{CC} or GND			±100	mA
θ_{JA}	Package thermal impedance[(3)]	DCT package		220	°C/W
		DCU package		227	
		YEP/YZP package		102	
T_{stg}	Storage temperature range		–65	150	°C

(1) Stresses beyond those listed under "absolute maximum ratings" may cause permanent damage to the device. These are stress ratings only, and functional operation of the device at these or any other conditions beyond those indicated under "recommended operating conditions" is not implied. Exposure to absolute-maximum-rated conditions for extended periods may affect device reliability.
(2) The input negative-voltage and output voltage ratings may be exceeded if the input and output current ratings are observed.
(3) The package thermal impedance is calculated in accordance with JESD 51-7.

Recommended Operating Conditions[(1)]

			MIN	MAX	UNIT
V_{CC}	Supply voltage		0.8	2.7	V
V_{IH}	High-level input voltage	V_{CC} = 0.8 V	V_{CC}		V
		V_{CC} = 1.1 V to 1.95 V	0.65 × V_{CC}		
		V_{CC} = 2.3 V to 2.7 V	1.7		
V_{IL}	Low-level input voltage	V_{CC} = 0.8 V		0	V
		V_{CC} = 1.1 V to 1.95 V		0.35 × V_{CC}	
		V_{CC} = 2.3 V to 2.7 V		0.7	
V_I	Input voltage		0	3.6	V
V_O	Output voltage		0	V_{CC}	V
I_{OH}	High-level output current	V_{CC} = 0.8 V		–0.7	mA
		V_{CC} = 1.1 V		–3	
		V_{CC} = 1.4 V		–5	
		V_{CC} = 1.65 V		–8	
		V_{CC} = 2.3 V		–9	
I_{OL}	Low-level output current	V_{CC} = 0.8 V		0.7	mA
		V_{CC} = 1.1 V		3	
		V_{CC} = 1.4 V		5	
		V_{CC} = 1.65 V		8	
		V_{CC} = 2.3 V		9	
$\Delta t/\Delta v$	Input transition rise or fall rate	V_{CC} = 0.8 V to 1.65 V[(2)]		20	ns/V
		V_{CC} = 1.65 V to 2.3 V[(3)]		20	
		V_{CC} = 2.3 V to 2.7 V[(3)]		20	
T_A	Operating free-air temperature		–40	85	°C

(1) All unused inputs of the device must be held at V_{CC} or GND to ensure proper device operation. Refer to the TI application report, *Implications of Slow or Floating CMOS Inputs*, literature number SCBA004.
(2) The data was taken at C_L = 15 pF, R_L = 2 kΩ (see Figure 1).
(3) The data was taken at C_L = 30 pF, R_L = 500 Ω (see Figure 1).

Electrical Characteristics

over recommended operating free-air temperature range (unless otherwise noted)

PARAMETER		TEST CONDITIONS	V_{CC}	MIN	TYP(1)	MAX	UNIT
V_{OH}		I_{OH} = –100 µA	0.8 V to 2.7 V	V_{CC} – 0.1			V
		I_{OH} = –0.7 mA	0.8 V		0.55		
		I_{OH} = –3 mA	1.1 V	0.8			
		I_{OH} = –5 mA	1.4 V	1			
		I_{OH} = –8 mA	1.65 V	1.2			
		I_{OH} = –9 mA	2.3 V	1.8			
V_{OL}		I_{OL} = 100 µA	0.8 V to 2.7 V			0.2	V
		I_{OL} = 0.7 mA	0.8 V		0.25		
		I_{OL} = 3 mA	1.1 V			0.3	
		I_{OL} = 5 mA	1.4 V			0.4	
		I_{OL} = 8 mA	1.65 V			0.45	
		I_{OL} = 9 mA	2.3 V			0.6	
I_I	All inputs	$V_I = V_{CC}$ or GND	0 to 2.7 V			5	µA
I_{off}		V_I or V_O = 2.7 V	0			±10	µA
I_{CC}		$V_I = V_{CC}$ or GND, I_O = 0	0.8 V to 2.7 V			10	µA
C_i		$V_I = V_{CC}$ or GND	2.5 V		2.5		pF

(1) All typical values are at T_A = 25°C.

Timing Requirements

over recommended operating free-air temperature range (unless otherwise noted) (see Figure 1)

			V_{CC} = 0.8 V	V_{CC} = 1.2 V ± 0.1 V		V_{CC} = 1.5 V ± 0.1 V		V_{CC} = 1.8 V ± 0.15 V		V_{CC} = 2.5 V ± 0.2 V		UNIT
			TYP	MIN	MAX	MIN	MAX	MIN	MAX	MIN	MAX	
f_{clock}	Clock frequency		50		200		225		250		275	MHz
t_w	Pulse duration	CLK	2	1		1		1		1		ns
		$\overline{PRE}$ or $\overline{CLR}$ low	5	1.5		1		1		1		
t_{su}	Setup time before CLK↑	Data	2.2	0.6		0.5		0.5		0.4		ns
		$\overline{PRE}$ or $\overline{CLR}$ inactive	2.9	1.6		0.9		0.7		0.4		
t_h	Hold time, data after CLK↑		1.2	0.5		0.4		0.3		0.3		ns

Switching Characteristics

over recommended operating free-air temperature range, C_L = 15 pF (unless otherwise noted) (see Figure 1)

PARAMETER	FROM (INPUT)	TO (OUTPUT)	V_{CC} = 0.8 V	V_{CC} = 1.2 V ± 0.1 V		V_{CC} = 1.5 V ± 0.1 V		V_{CC} = 1.8 V ± 0.15 V			V_{CC} = 2.5 V ± 0.2 V		UNIT
			TYP	MIN	MAX	MIN	MAX	MIN	TYP	MAX	MIN	MAX	
f_{max}			50	200		225		250			275		MHz
t_{pd}	CLK	Q	10.3	1.7	3.7	1.2	2.5	1	1.2	1.7	0.8	1.2	ns
		$\overline{Q}$	9.6	1	3.8	1	3	0.9	1.1	1.5	0.7	1.1	
	$\overline{PRE}$ or $\overline{CLR}$	Q or $\overline{Q}$	12.9	2	4.5	0.9	3.1	1.1	1.5	2.2	0.9	1.5	

Switching Characteristics

over recommended operating free-air temperature range, C_L = 30 pF (unless otherwise noted) (see Figure 1)

PARAMETER	FROM (INPUT)	TO (OUTPUT)	V_{CC} = 1.8 V ± 0.15 V			V_{CC} = 2.5 V ± 0.2 V		UNIT
			MIN	TYP	MAX	MIN	MAX	
f_{max}			250			275		ns
t_{pd}	CLK	Q	1.5	1.9	2.4	1.4	1.8	ns
		$\overline{Q}$	1.4	1.9	2.4	1.3	1.8	
	$\overline{PRE}$ or $\overline{CLR}$	Q or $\overline{Q}$	1.7	2.2	2.8	1.5	2.1	

Operating Characteristics

T_A = 25°C

PARAMETER		TEST CONDITIONS	V_{CC} = 0.8 V	V_{CC} = 1.2 V	V_{CC} = 1.5 V	V_{CC} = 1.8 V	V_{CC} = 2.5 V	UNIT
			TYP	TYP	TYP	TYP	TYP	
C_{pd}	Power dissipation capacitance	f = 10 MHz	35	36	39	44	59	pF

PARAMETER MEASUREMENT INFORMATION

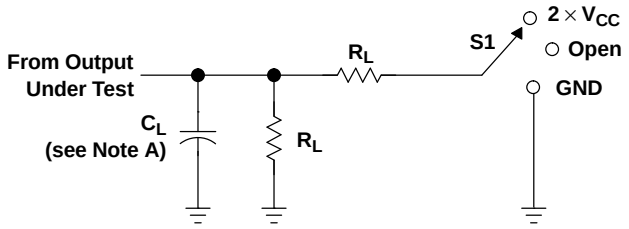

LOAD CIRCUIT

TEST	S1
t_{PLH}/t_{PHL}	Open
t_{PLZ}/t_{PZL}	$2 \times V_{CC}$
t_{PHZ}/t_{PZH}	GND

V_{CC}	C_L	R_L	V_Δ
0.8 V	15 pF	2 kΩ	0.1 V
1.2 V ± 0.1 V	15 pF	2 kΩ	0.1 V
1.5 V ± 0.1 V	15 pF	2 kΩ	0.1 V
1.8 V ± 0.15 V	15 pF	2 kΩ	0.15 V
2.5 V ± 0.2 V	15 pF	2 kΩ	0.15 V
1.8 V ± 0.15 V	30 pF	1 kΩ	0.15 V
2.5 V ± 0.2 V	30 pF	500 Ω	0.15 V

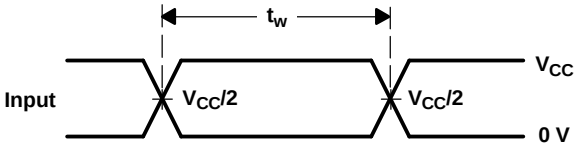

VOLTAGE WAVEFORMS
PULSE DURATION

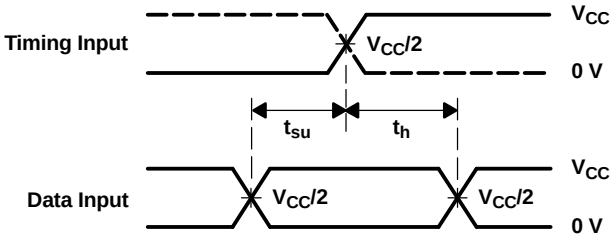

VOLTAGE WAVEFORMS
SETUP AND HOLD TIMES

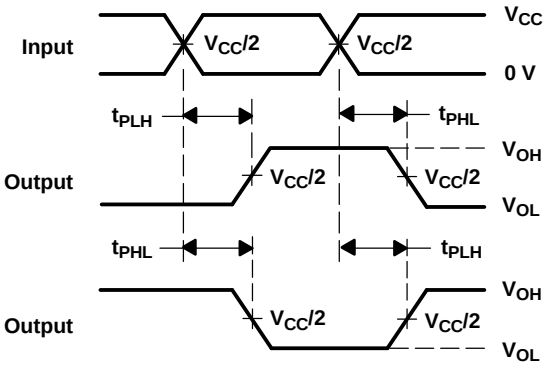

VOLTAGE WAVEFORMS
PROPAGATION DELAY TIMES
INVERTING AND NONINVERTING OUTPUTS

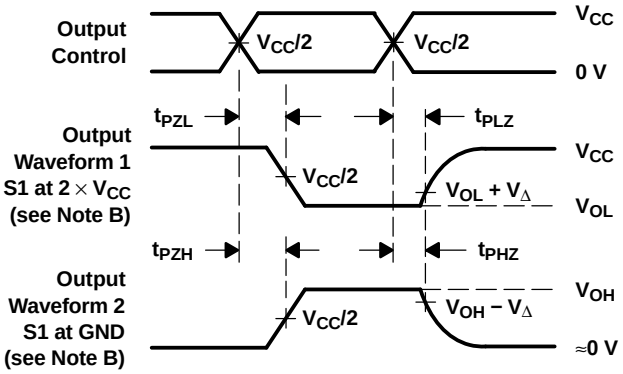

VOLTAGE WAVEFORMS
ENABLE AND DISABLE TIMES
LOW- AND HIGH-LEVEL ENABLING

NOTES:
A. C_L includes probe and jig capacitance.
B. Waveform 1 is for an output with internal conditions such that the output is low, except when disabled by the output control. Waveform 2 is for an output with internal conditions such that the output is high, except when disabled by the output control.
C. All input pulses are supplied by generators having the following characteristics: PRR ≤ 10 MHz, Z_O = 50 Ω, slew rate ≥ 1 V/ns.
D. The outputs are measured one at a time, with one transition per measurement.
E. t_{PLZ} and t_{PHZ} are the same as t_{dis}.
F. t_{PZL} and t_{PZH} are the same as t_{en}.
G. t_{PLH} and t_{PHL} are the same as t_{pd}.
H. All parameters and waveforms are not applicable to all devices.

Figure 1. Load Circuit and Voltage Waveforms

PACKAGING INFORMATION

Orderable Device	Status [1]	Package Type	Package Drawing	Pins	Package Qty	Eco Plan [2]	Lead/Ball Finish	MSL Peak Temp [3]
SN74AUC1G74DCTR	ACTIVE	SM8	DCT	8	3000	Pb-Free (RoHS)	CU NIPDAU	Level-1-260C-UNLIM
SN74AUC1G74DCTRE4	ACTIVE	SM8	DCT	8	3000	Pb-Free (RoHS)	CU NIPDAU	Level-1-260C-UNLIM
SN74AUC1G74DCUR	ACTIVE	US8	DCU	8	3000	Green (RoHS & no Sb/Br)	CU NIPDAU	Level-1-260C-UNLIM
SN74AUC1G74DCURE4	ACTIVE	US8	DCU	8	3000	Green (RoHS & no Sb/Br)	CU NIPDAU	Level-1-260C-UNLIM
SN74AUC1G74YEPR	NRND	WCSP	YEP	8	3000	TBD	SNPB	Level-1-260C-UNLIM
SN74AUC1G74YZPR	ACTIVE	WCSP	YZP	8	3000	Green (RoHS & no Sb/Br)	SNAGCU	Level-1-260C-UNLIM

[1] The marketing status values are defined as follows:
ACTIVE: Product device recommended for new designs.
LIFEBUY: TI has announced that the device will be discontinued, and a lifetime-buy period is in effect.
NRND: Not recommended for new designs. Device is in production to support existing customers, but TI does not recommend using this part in a new design.
PREVIEW: Device has been announced but is not in production. Samples may or may not be available.
OBSOLETE: TI has discontinued the production of the device.

[2] Eco Plan - The planned eco-friendly classification: Pb-Free (RoHS), Pb-Free (RoHS Exempt), or Green (RoHS & no Sb/Br) - please check http://www.ti.com/productcontent for the latest availability information and additional product content details.
TBD: The Pb-Free/Green conversion plan has not been defined.
Pb-Free (RoHS): TI's terms "Lead-Free" or "Pb-Free" mean semiconductor products that are compatible with the current RoHS requirements for all 6 substances, including the requirement that lead not exceed 0.1% by weight in homogeneous materials. Where designed to be soldered at high temperatures, TI Pb-Free products are suitable for use in specified lead-free processes.
Pb-Free (RoHS Exempt): This component has a RoHS exemption for either 1) lead-based flip-chip solder bumps used between the die and package, or 2) lead-based die adhesive used between the die and leadframe. The component is otherwise considered Pb-Free (RoHS compatible) as defined above.
Green (RoHS & no Sb/Br): TI defines "Green" to mean Pb-Free (RoHS compatible), and free of Bromine (Br) and Antimony (Sb) based flame retardants (Br or Sb do not exceed 0.1% by weight in homogeneous material)

[3] MSL, Peak Temp. -- The Moisture Sensitivity Level rating according to the JEDEC industry standard classifications, and peak solder temperature.

Important Information and Disclaimer: The information provided on this page represents TI's knowledge and belief as of the date that it is provided. TI bases its knowledge and belief on information provided by third parties, and makes no representation or warranty as to the accuracy of such information. Efforts are underway to better integrate information from third parties. TI has taken and continues to take reasonable steps to provide representative and accurate information but may not have conducted destructive testing or chemical analysis on incoming materials and chemicals. TI and TI suppliers consider certain information to be proprietary, and thus CAS numbers and other limited information may not be available for release.

In no event shall TI's liability arising out of such information exceed the total purchase price of the TI part(s) at issue in this document sold by TI to Customer on an annual basis.

DCT (R-PDSO-G8) **PLASTIC SMALL-OUTLINE PACKAGE**

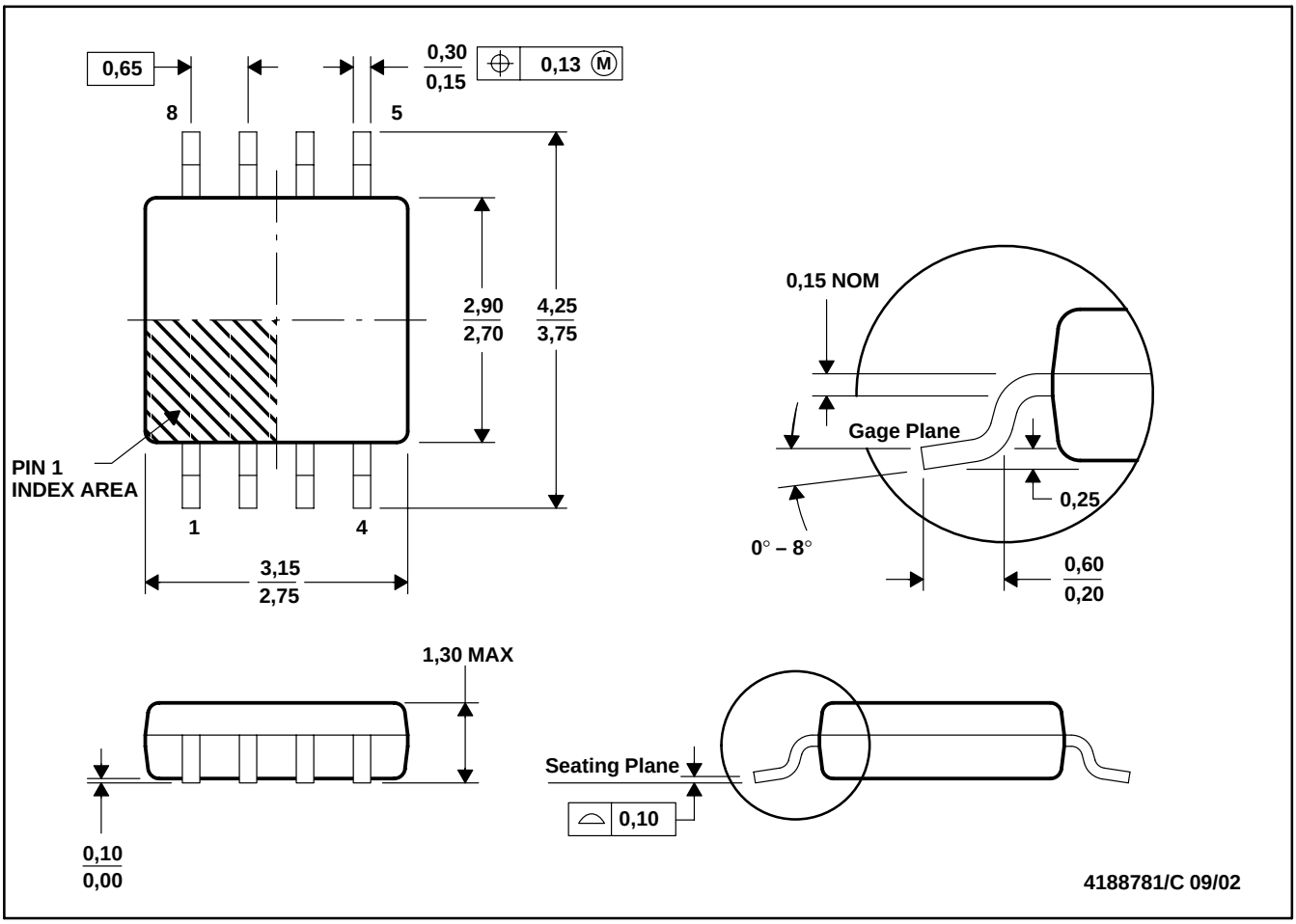

NOTES: A. All linear dimensions are in millimeters.
B. This drawing is subject to change without notice.
C. Body dimensions do not include mold flash or protrusion
D. Falls within JEDEC MO-187 variation DA.

DCU (R–PDSO–G8) PLASTIC SMALL–OUTLINE PACKAGE (DIE DOWN)

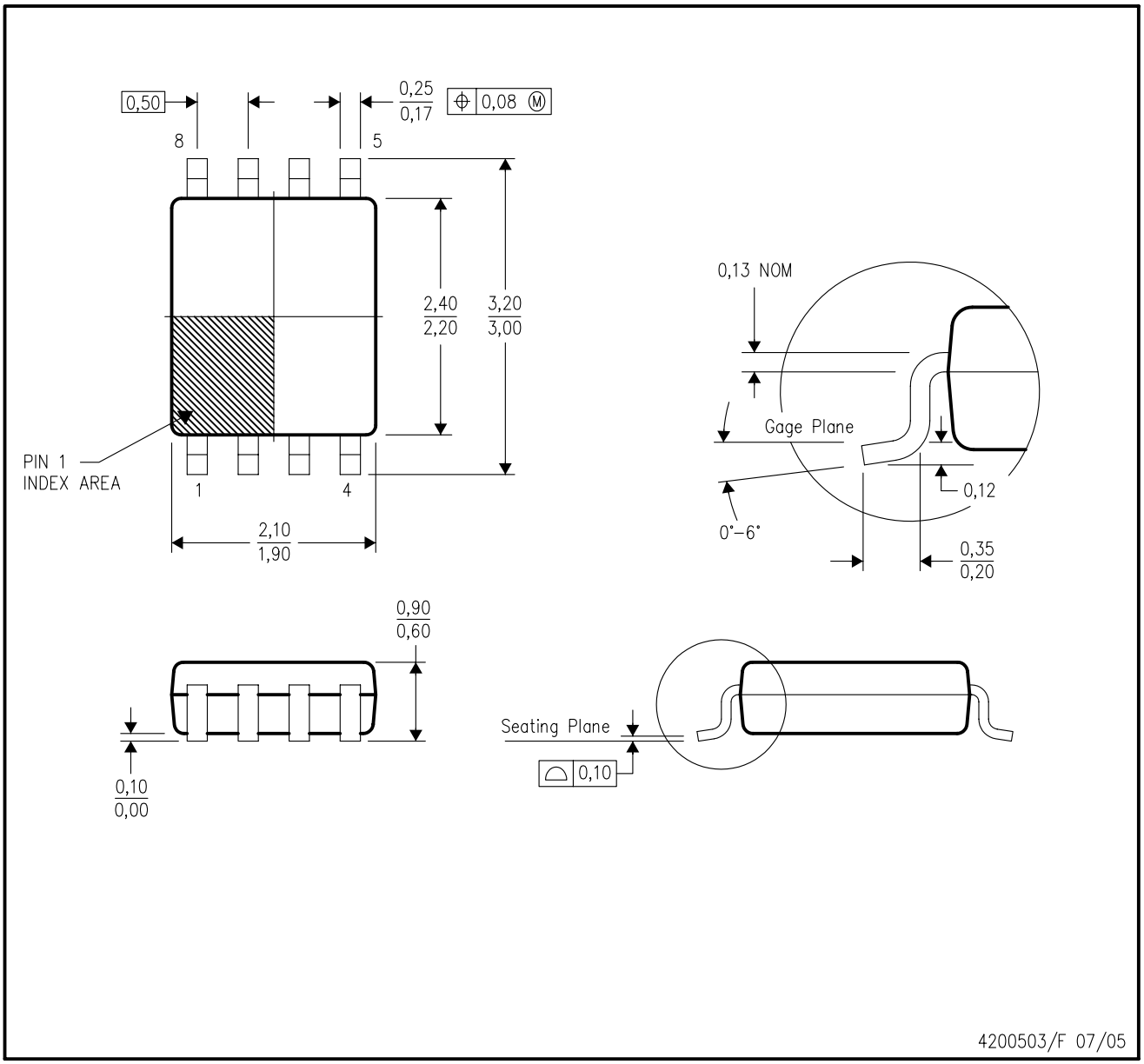

NOTES:
A. All linear dimensions are in millimeters.
B. This drawing is subject to change without notice.
C. Body dimensions do not include mold flash or protrusion. Mold flash and protrusion shall not exceed 0.15 per side.
D. Falls within JEDEC MO–187 variation CA.

YZP (R–XBGA–N8) DIE–SIZE BALL GRID ARRAY

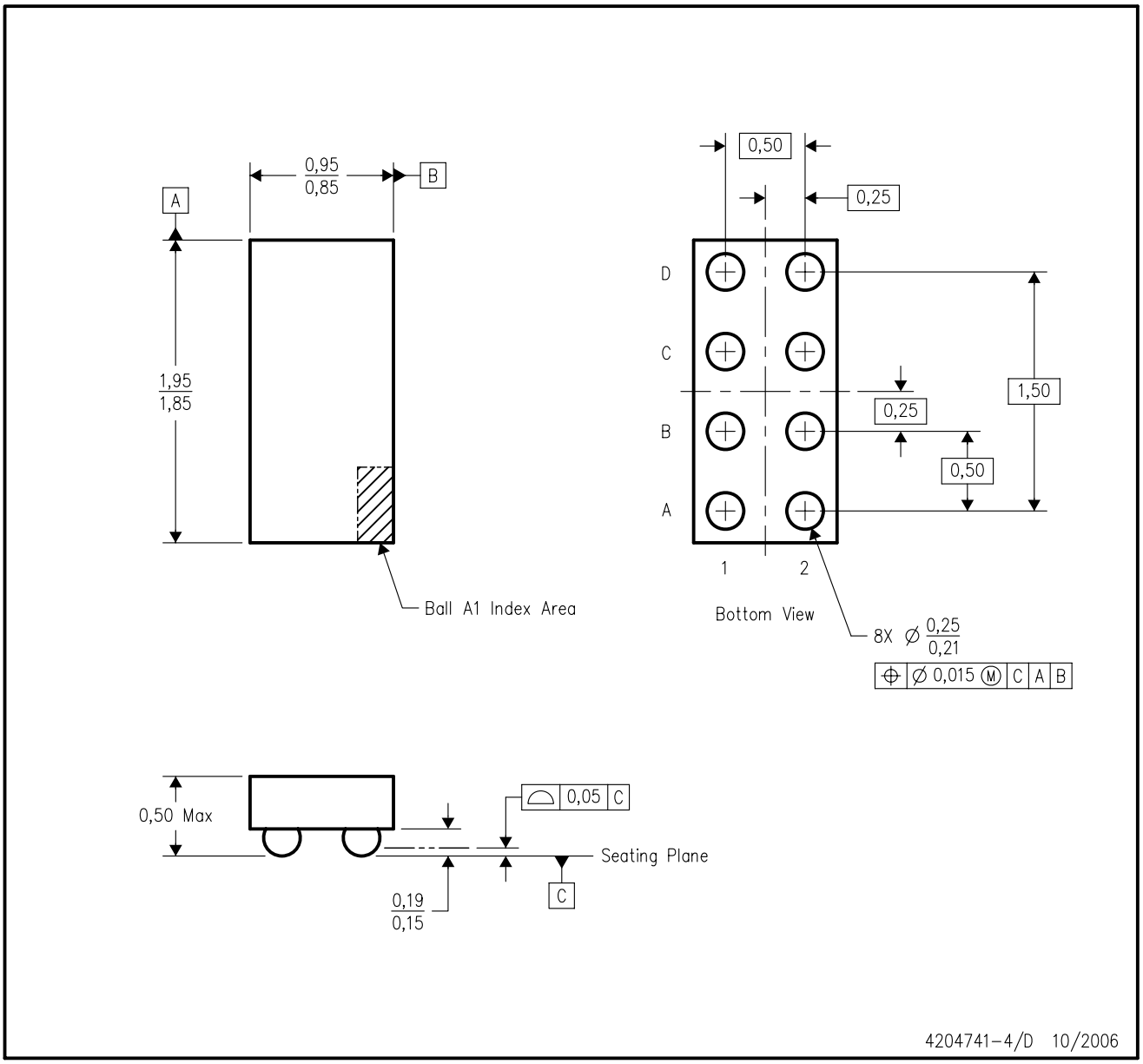

NOTES:
A. All linear dimensions are in millimeters. Dimensioning and tolerancing per ASME Y14.5M–1994.
B. This drawing is subject to change without notice.
C. NanoFree™ package configuration.
D. This package is lead–free. Refer to the 8 YEP package (drawing 4204725) for tin–lead (SnPb).

NanoFree is a trademark of Texas Instruments.

YEP (R–XBGA–N8) DIE–SIZE BALL GRID ARRAY

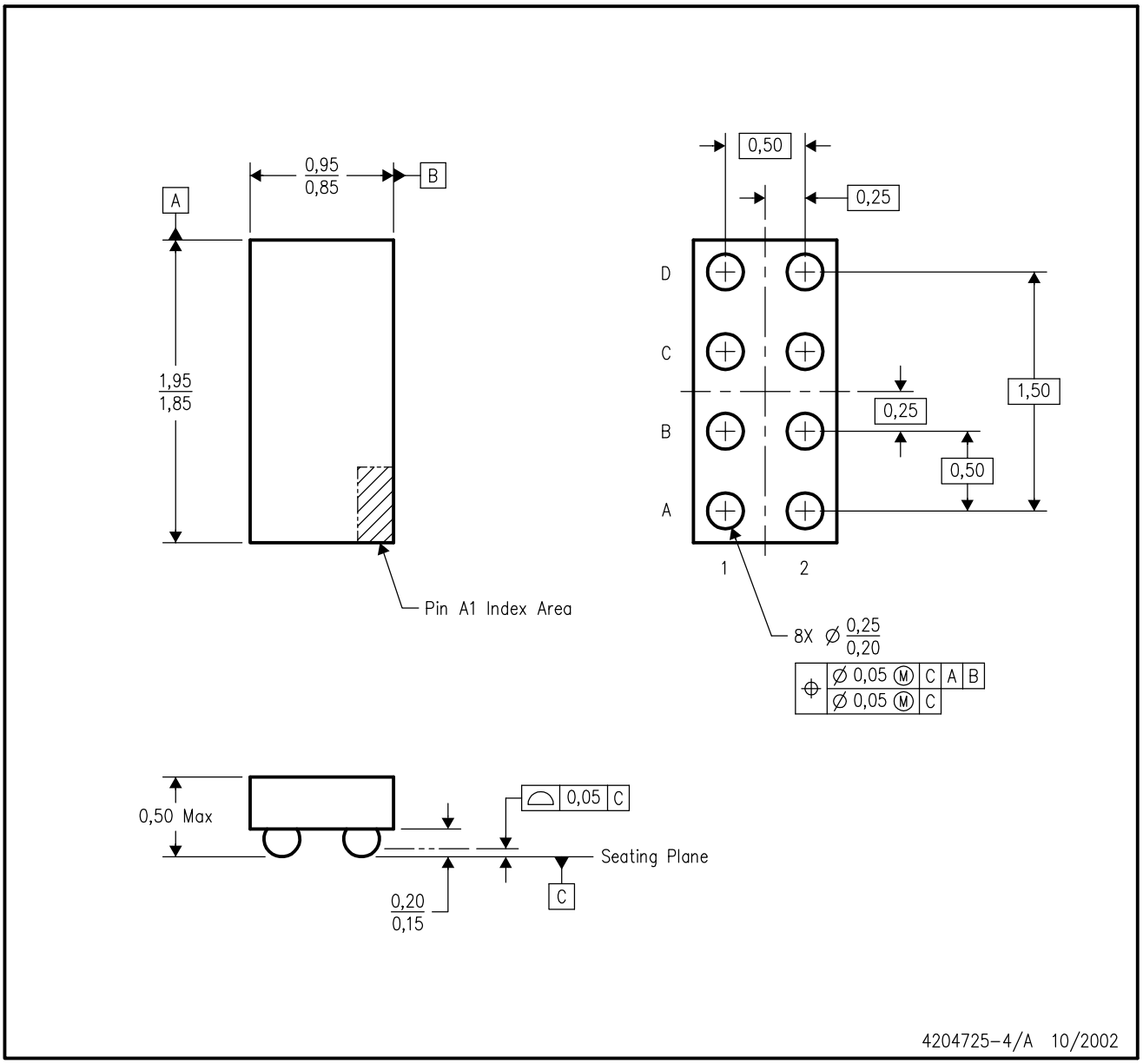

NOTES:
A. All linear dimensions are in millimeters.
B. This drawing is subject to change without notice.
C. NanoStar™ package configuration.
D. This package is tin–lead (SnPb). Refer to the 8 YZP package (drawing 4204741) for lead–free.

NanoStar is a trademark of Texas Instruments.

IMPORTANT NOTICE

Texas Instruments Incorporated and its subsidiaries (TI) reserve the right to make corrections, modifications, enhancements, improvements, and other changes to its products and services at any time and to discontinue any product or service without notice. Customers should obtain the latest relevant information before placing orders and should verify that such information is current and complete. All products are sold subject to TI's terms and conditions of sale supplied at the time of order acknowledgment.

TI warrants performance of its hardware products to the specifications applicable at the time of sale in accordance with TI's standard warranty. Testing and other quality control techniques are used to the extent TI deems necessary to support this warranty. Except where mandated by government requirements, testing of all parameters of each product is not necessarily performed.

TI assumes no liability for applications assistance or customer product design. Customers are responsible for their products and applications using TI components. To minimize the risks associated with customer products and applications, customers should provide adequate design and operating safeguards.

TI does not warrant or represent that any license, either express or implied, is granted under any TI patent right, copyright, mask work right, or other TI intellectual property right relating to any combination, machine, or process in which TI products or services are used. Information published by TI regarding third-party products or services does not constitute a license from TI to use such products or services or a warranty or endorsement thereof. Use of such information may require a license from a third party under the patents or other intellectual property of the third party, or a license from TI under the patents or other intellectual property of TI.

Reproduction of information in TI data books or data sheets is permissible only if reproduction is without alteration and is accompanied by all associated warranties, conditions, limitations, and notices. Reproduction of this information with alteration is an unfair and deceptive business practice. TI is not responsible or liable for such altered documentation.

Resale of TI products or services with statements different from or beyond the parameters stated by TI for that product or service voids all express and any implied warranties for the associated TI product or service and is an unfair and deceptive business practice. TI is not responsible or liable for any such statements.

Following are URLs where you can obtain information on other Texas Instruments products and application solutions:

Products		**Applications**	
Amplifiers	amplifier.ti.com	Audio	www.ti.com/audio
Data Converters	dataconverter.ti.com	Automotive	www.ti.com/automotive
DSP	dsp.ti.com	Broadband	www.ti.com/broadband
Interface	interface.ti.com	Digital Control	www.ti.com/digitalcontrol
Logic	logic.ti.com	Military	www.ti.com/military
Power Mgmt	power.ti.com	Optical Networking	www.ti.com/opticalnetwork
Microcontrollers	microcontroller.ti.com	Security	www.ti.com/security
Low Power Wireless	www.ti.com/lpw	Telephony	www.ti.com/telephony
		Video & Imaging	www.ti.com/video
		Wireless	www.ti.com/wireless

Mailing Address: Texas Instruments
Post Office Box 655303 Dallas, Texas 75265

Copyright © 2006, Texas Instruments Incorporated